Concord
NORTH CAROLINA
High Performance Living

CITY OF CONCORD
MANUAL OF STANDARD DETAILS

MARCH 2022

DRV - DRIVEWAY STANDARDS	
Standard	*Title*
DRV-100	GENERAL DRIVEWAY (DW) NOTES & DIMENSIONS
DRV-101 (2 SHEETS)	GENERAL DRIVEWAY LOCATION DIMENSIONS
DRV-102	DROP CURB RAMP TYPE DW (PLANT STRIP & 2'-6" C&G)
DRV-103	RADIUS CURB RAMP TYPE DW (PLANT STRIP & 2'-6" C&G)
DRV-104	RES. RAMP TYPE DW (BOC 2'-6" C&G)
DRV-105	STREET TYPE DW (2'-6" C&G)
DRV-106	RES. RAMP TYPE VALLEY CURB
DRV-107	RAMP TYPE DW RIBBON PAVEMENT
DRV-108	CONC. CURB & GUTTER DRIVEWAY CUT
DRV-120	ACCESSIBLE PARKING AND SIGNAGE STANDARDS
DRV-121	STANDARD PARKING DIMENSIONS

MI - MISCELLANEAOUS INFRASTRUCTURE STANDARDS	
Standard	*Title*
MI-101	CONC. CURB & GUTTER DETAILS
MI-102	CURB TRANSITION (2-6 TO 2)
MI-103	CURB TRANS. 2-6 TO 1-6
MI-104	CONC. SWLKS
MI-105	SWLK TRANS.
MI-106	CONCRETE MULTI-USE PATH
MI-107	ASPHALT MULTI-USE-PATH
MI-109	TYP. INTERSECTION CURB RAMP LAYOUT AND NOTES
MI-110	TRUNCATED DOMES
MI-111	PERP. CR 2-6 C&G
MI-112	PERP. CR 2-0 VALLEY C&G
MI-113	DIRECTIONAL CURB RAMP SMALL/MED RADIUS
MI-114	DIRECTIONAL CURB RAMP LARGE RADIUS
MI-115	DIRECTIONAL CURB RAMP W/VALLEY CURB
MI-116	PED REFUGE MEDIAN (1'-6" CURB)
MI-117	PED REFUGE MEDIAN (MONOLITHIC CONC.)

STR - STREETS STANDARDS	
Standard	*Title*
STR-101	LOCAL RESIDENTIAL (RES.) STREET
STR-102	RES. COLLECTOR STREET
STR-103	RES. COLLECTOR STREET WITH BICYCLE LANES
STR-104	RES. COLLECTOR WITH PARALLEL PARKING
STR-105	RES. COLLECTOR WITH 45 DEG. REVERSE ANGLE PARKING
STR-106	NON-RES. COLLECTOR
STR-107	NON-RES. COLLECTOR WITH BICYCLE LANES
STR-108	NON-RES. COLLECTOR DIVIDED
STR-109	NON-RES. COLLECTOR 45 DEG. ANGLE PARKING
STR-110	NON-RES. COLLECTOR PARALLEL PARKING
STR-111	RES. CUL-DE-SAC LESS THAN 150'
STR-112	RES. CUL-DE-SAC GREATER THAN 150' (ENCROACHMENT)
STR-113	NON-RES. AND MIXED USE CUL-DE-SAC
STR-114	RES. ALLEY
STR-116	TRANSITION BETWEEN STREET CLASSIFICATIONS
STR-118	CATCH BASIN IN VALLEY CURB
STR-119	CULVERT CROSSING
STR-120	ON-STREET PARALLEL PARKING
STR-121	ACCESSIBLE ONSTREET PARALLEL PARKING
STR-122	ON-STREET REVERSE ANGLE PARKING

MISC - MICELLANEAOUS STANDARDS	
Standard	*Title*
MISC-201	CURB AND GUTTER REMOVAL / REPLACEMENT
MISC-202	UTILITY CUT REPLACEMENT DETAIL
MISC-203 (2 SHEETS)	END OF ROAD BARRICADE
MISC-204	END OF ROAD MARKER
MISC-205	END OF STREET FUTURE DEV. SIGN
MISC-206 (2 SHEETS)	SAFETY RAIL & WARRANTS

NOT TO SCALE

Concord NORTH CAROLINA High Performance Living

CONCORD MANUAL OF STANDARD DETAILS
TABLE OF CONTENTS

3-2022
CMSD - TOC
SHEET 1 OF 1

MINIMUM DRIVEWAY SEPARATION		
	CORRESPONDING DIST. FROM DETAIL SHEETS	
	D	**C**
FUNCTIONAL CLASSIFICATION (STREET A)	SEPARATION BETWEEN DRIVEWAYS[1] (FEET)	SEPARATION BETWEEN DRIVEWAY & STREET[2] (FEET)
Major Thoroughfare		
Non-Res. & Multi-Family	400	250
Single-Family Detached	150	250
Minor Thoroughfare		
Non-Res. & Multi-Family	400	250
Single-Family Detached	150	250
Major Collector		
Non-Res. & Multi-Family	120	120
Single-Family Detached	120	120
Minor Collector		
Non-Res. & Multi-Family	50	60
Single-Family Detached	30	30
Local Street (Inc. Alleys)		
Non-Res. & Multi-Family	50	60
Single-Family Detached	30	30
Single-Family Attached	10	30

[1] Distance is measured from the closest edge to the closest edge.

[2] Distance is measured from closest edge of the driveway to the closest parallel edge of the street right-of-way. Minimum separation between Driveways and Streets should be equal to the number shown in the table, the minimum distance required to ensure no portion of a driveway falls within a sight triangle, or the minimum stem length required along entrances to proposed developments. The greatest distance will apply.

MINIMUM STEM LENGTHS	
CLASSIFICATION OF PERPENDICULAR STREET	**L** - MINIMUM STEM LENGTH (FEET)
MAJOR THROUGHFARE	125
MINOR THROUGHFARE	100
MAJOR COLLECTOR	75
MINOR COLLECTOR	
Non-Residential & Multi-Family	70
Single Family Residential	60
LOCAL STREET (INC. ALLEYS)	50

MINIMUM AND MAXIMUM ACCESS WIDTHS				
DRIVEWAY TYPES	**W** - DRIVEWAY WIDTH (FEET)		**F** - FLARE / **R**-RADIUS (FEET)	
	MIN.	MAX.	MIN.	MAX.
Res. Single-Family (Detached)	12	20	1	3
Res. Multi-Family	24	36	5	10
Comm./Industrial (two-way)	24	36	10	30
Comm./Industrial (one-way)	15	20	10	30
Private Street Entrance	24	48	10*	30*
Street Type Driveway	24	36	10*	30*
*Radius only				

SIDE CLEARANCE	
LAND USE	**S** MINIMUM SIDE CLEARANCE
Single-Family Residential Uses	5 Feet
All Other Uses	10 Feet

DRIVEWAY NOTES:

1. ALL CONNECTIONS TO STATE MAINTAINED STREETS MUST BE APPROVED BY NCDOT UNLESS EXEMPT.
2. WHERE NCDOT AND CITY STANDARDS DIFFER, THE STRICTEST STANDARDS MEETING THE MINIMUM REQUIREMENTS OF BOTH WILL APPLY.
3. THE DRIVEWAY APPROACH MUST BE INSTALLED TO THE RIGHT-OF-WAY LINE, AT LEAST 10 FEET FROM THE EDGE OF THE STREET AND/OR BACK OF CURB, OR AT LEAST 5' FROM THE EDGE OF SIDEWALK FURTHEST FROM THE EDGE OF THE STREET. THE GREATEST DISTANCE WILL APPLY.
4. DRIVEWAYS ACCESSING MAJOR OR MINOR THOROUGHFARES OR BOULEVARDS MUST PROVIDE ON-SITE TURNAROUND.
5. DRIVEWAYS ASSOCIATED WITH CORNER LOTS SHOULD BE LOCATED ON THE STREET WITH THE LOWER FUNCTIONAL CLASSIFICATION.
6. REFER TO SECTION 7.5 IN ARTICLE II OF THE TECHNICAL STANDARDS MANUAL (TSM) FOR SIGHT TRIANGLE REQUIREMENTS.
7. REFER TO ARTICLE III OF THE TSM FOR MORE STANDARDS PERTAINING TO DRIVEWAYS.

NOT TO SCALE

Concord NORTH CAROLINA High Performance Living

GENERAL DRIVEWAY NOTES & DIMENSIONS

3-2022

DRV-100

SHEET 1 OF 1

NOTES:
SEE STD. DETAIL DRV-100 FOR DRIVEWAY NOTES

A = APPROACH ANGLE = 90°
C* = CORNER CLEARANCE
D* = DW SEPARATION
F* = FLARE WIDTH
L* = STEM LENGTH
R* = RADIUS
S* = SIDE CLEARANCE
W* = DW WIDTH
ST = SIGHT TRIANGLE (AS REQ.)

*SEE TABLES ON STD. DETAIL DRV-100

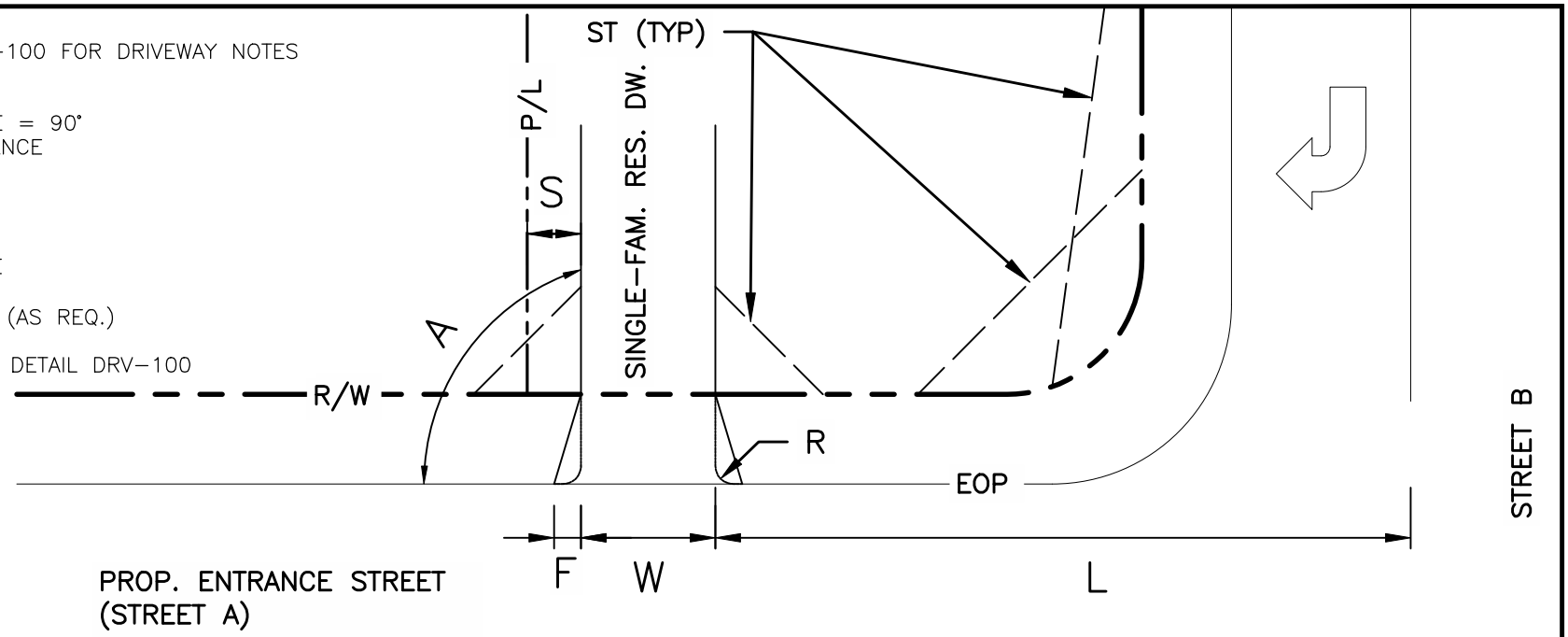

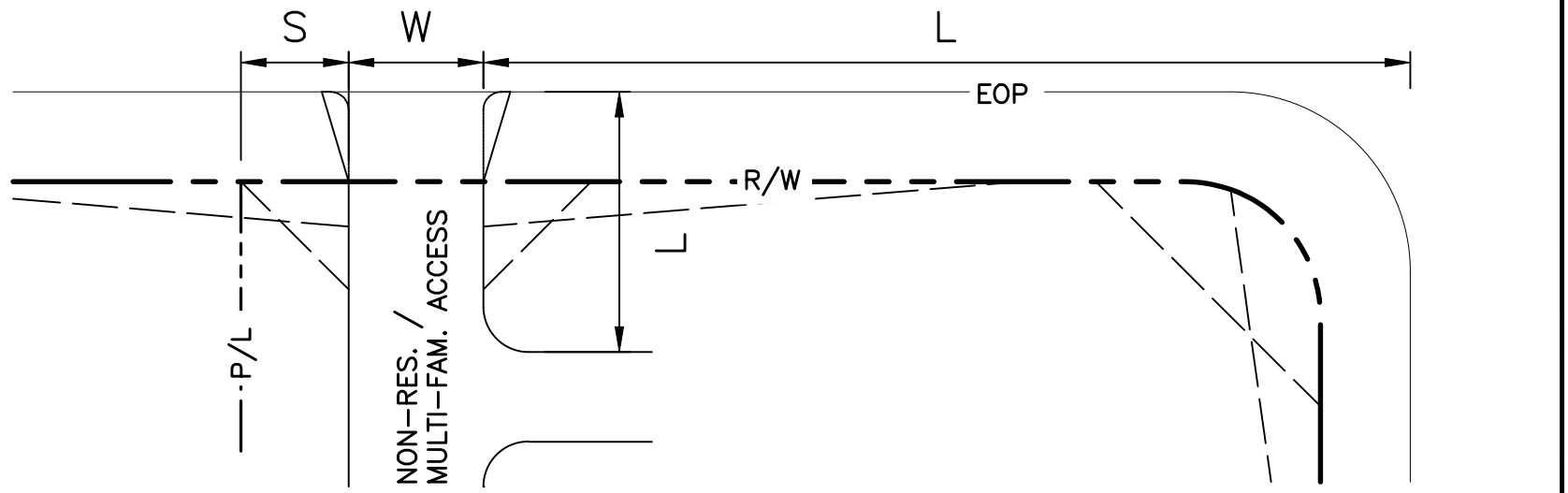

NOT TO SCALE

Concord NORTH CAROLINA High Performance Living

GENERAL DRIVEWAY LOCATION DIMENSIONS

3-2022
DRV-101
SHEET 1 OF 2

NOTES:
SEE STD. DETAIL DRV–100 FOR DRIVEWAY NOTES

A = APPROACH ANGLE = 90°
C* = CORNER CLEARANCE
D* = DW SEPARATION
F* = FLARE WIDTH
L* = STEM LENGTH
R* = RADIUS
S* = SIDE CLEARANCE
W* = DW WIDTH
ST = SIGHT TRIANGLE (AS REQ.)

*SEE TABLES ON STD. DETAIL DRV–100

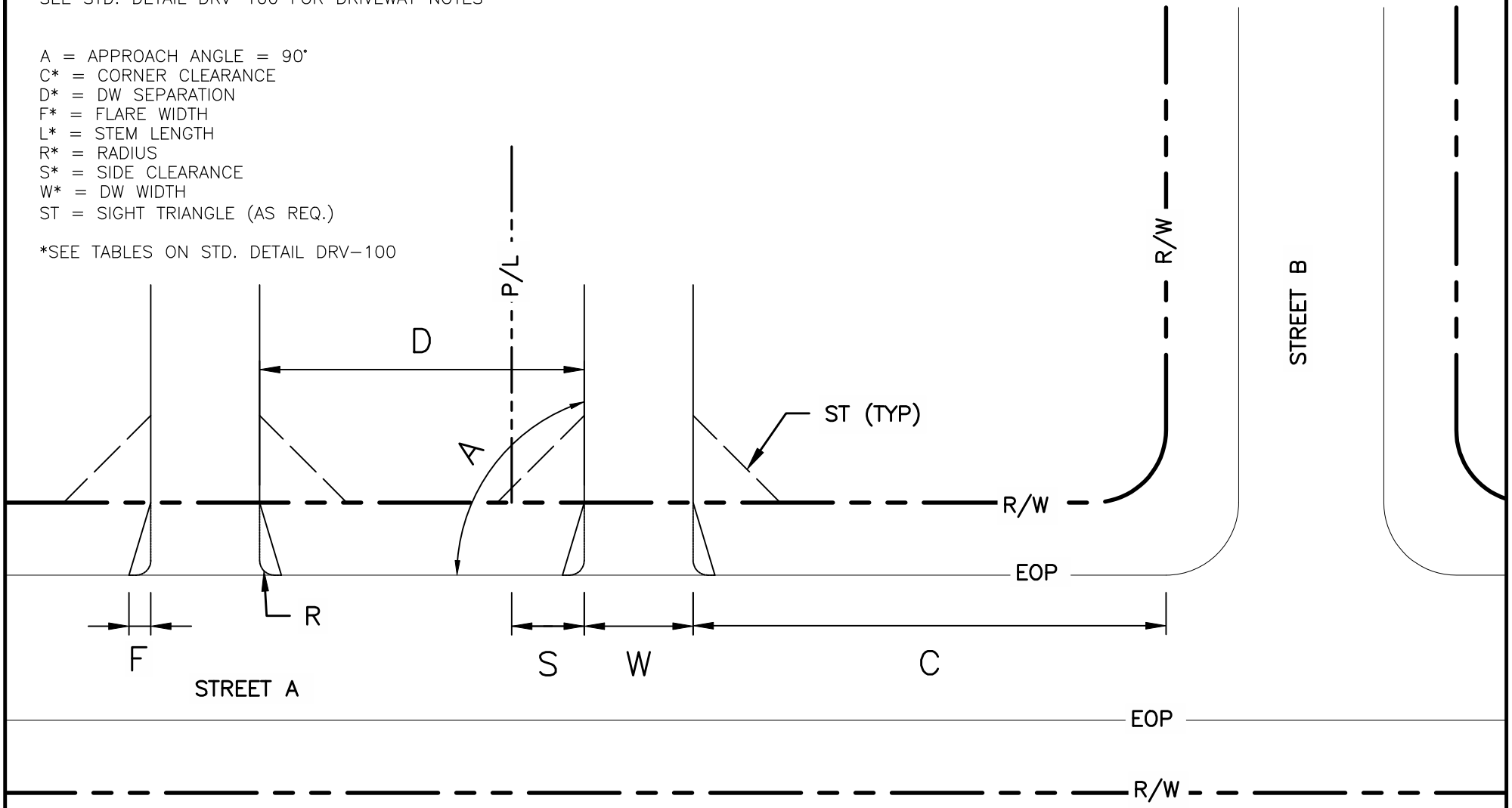

NOT TO SCALE

Concord NORTH CAROLINA High Performance Living

GENERAL DRIVEWAY LOCATION DIMENSIONS

3–2022
DRV–101
SHEET 2 OF 2

NOTES:

1. ALL CONCRETE TO BE 3600 P.S.I.
2. ALL CURB OR CURB AND GUTTER AND SIDEWALKS ARE TO BE REMOVED TO THE NEAREST JOINT BEYOND NEW CONSTRUCTION OR CUT WITH A SAW AND REMOVED. SAW CUT OR JOINT TO BE PERPENDICULAR TO EDGE OF EXISTING PAVEMENT.
3. ALL DRIVEWAYS MUST MEET THE CURRENT CITY DRIVEWAY REGULATIONS AND NCDOT REQUIREMENTS FOR SPACING, SIGHT DISTANCE AND OFFSETS FROM PROPERTY LINES AND INTERSECTIONS.
4. "A" – BREAKOVER SHALL BE 8% OR LESS (A = ALGEBRAIC DIFFERENCE).
5. PRIOR APPROVAL IS REQUIRED ON GRADES EXCEEDING WHAT ARE SHOWN.
6. ** – PER NC IFC SECTION D103.2, FIRE APPARATUS ACCESS ROADS SHALL NOT EXCEED 10 PERCENT IN GRADE.
7. JOINT MATERIAL SHOULD BE PLACED FLUSH WITH CONCRETE.
8. * – THE DRIVEWAY MUST RISE 6" FROM THE GUTTER LINE TO PREVENT RUNOFF FROM ENTERING DRIVEWAY.
9. REFER TO TSM AND STD. DRV–100 AND DRV–101 FOR ASSOCIATED DIMENSIONS AND LOCATION INFORMATION.

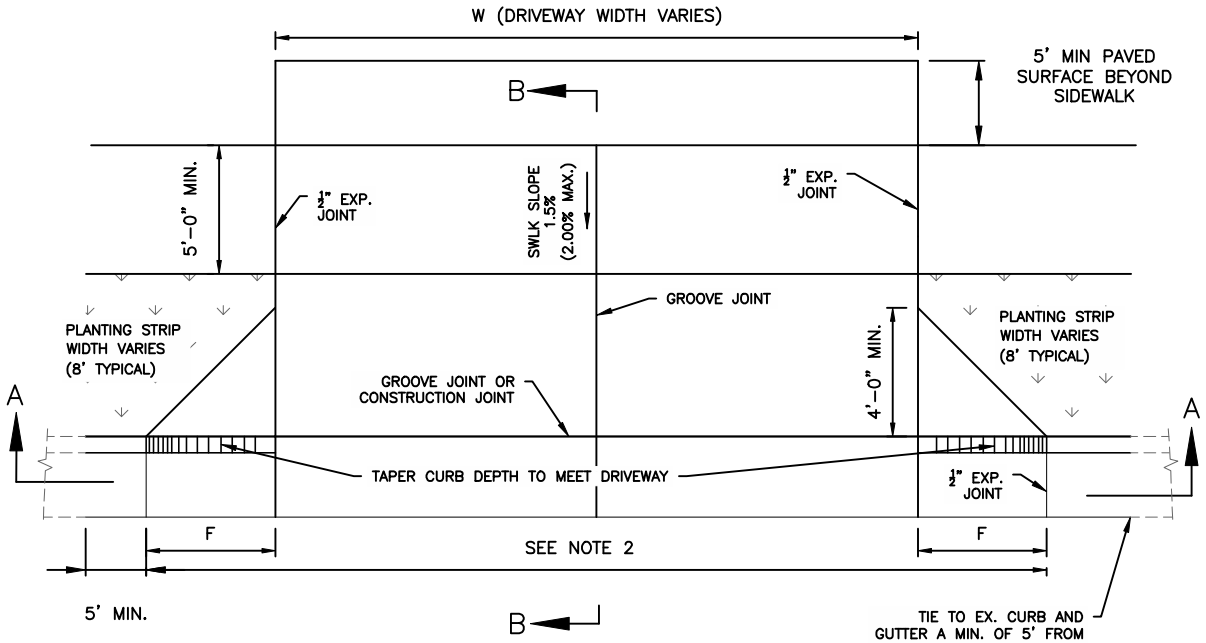

PLAN VIEW

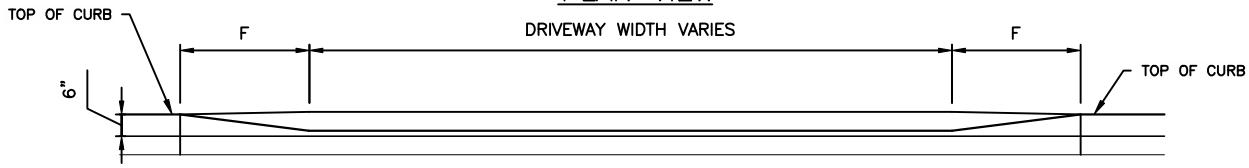

SECTION A – A

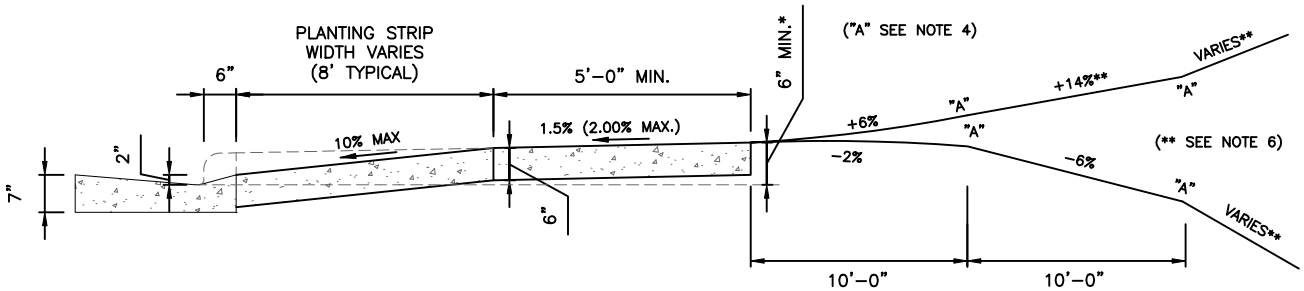

SECTION B – B

NOT TO SCALE

Concord NORTH CAROLINA High Performance Living

DROP CURB RAMP TYPE DRIVEWAY
PLANTING STRIP & 2'–6" CURB AND GUTTER

3–2022

DRV–102

SHEET 1 OF 1

NOTES:

1. ALL CONCRETE TO BE 3600 P.S.I.
2. ALL CURB OR CURB AND GUTTER AND SIDEWALKS ARE TO BE REMOVED TO THE NEAREST JOINT BEYOND NEW CONSTRUCTION OR CUT WITH A SAW AND REMOVED. SAW CUT OR JOINT TO BE PERPENDICULAR TO EDGE OF EXISTING PAVEMENT.
3. ALL DRIVEWAYS MUST MEET THE CURRENT CITY DRIVEWAY REGULATIONS AND NCDOT REQUIREMENTS FOR SPACING, SIGHT DISTANCE AND OFFSETS FROM PROPERTY LINES AND INTERSECTIONS.
4. "A" – BREAKOVER SHALL BE 8% OR LESS (A = ALGEBRAIC DIFFERENCE).
5. PRIOR APPROVAL IS REQUIRED ON GRADES EXCEEDING WHAT ARE SHOWN.
6. ** – PER NC IFC SECTION D103.2, FIRE APPARATUS ACCESS ROADS SHALL NOT EXCEED 10 PERCENT IN GRADE.
7. JOINT MATERIAL SHOULD BE PLACED FLUSH WITH CONCRETE.
8. * – THE DRIVEWAY MUST RISE 6" FROM THE GUTTER LINE TO PREVENT RUNOFF FROM ENTERING DRIVEWAY.
9. REFER TO TSM AND STD. DRV–100 AND DRV–101 FOR ASSOCIATED DIMENSIONS AND LOCATION INFORMATION.

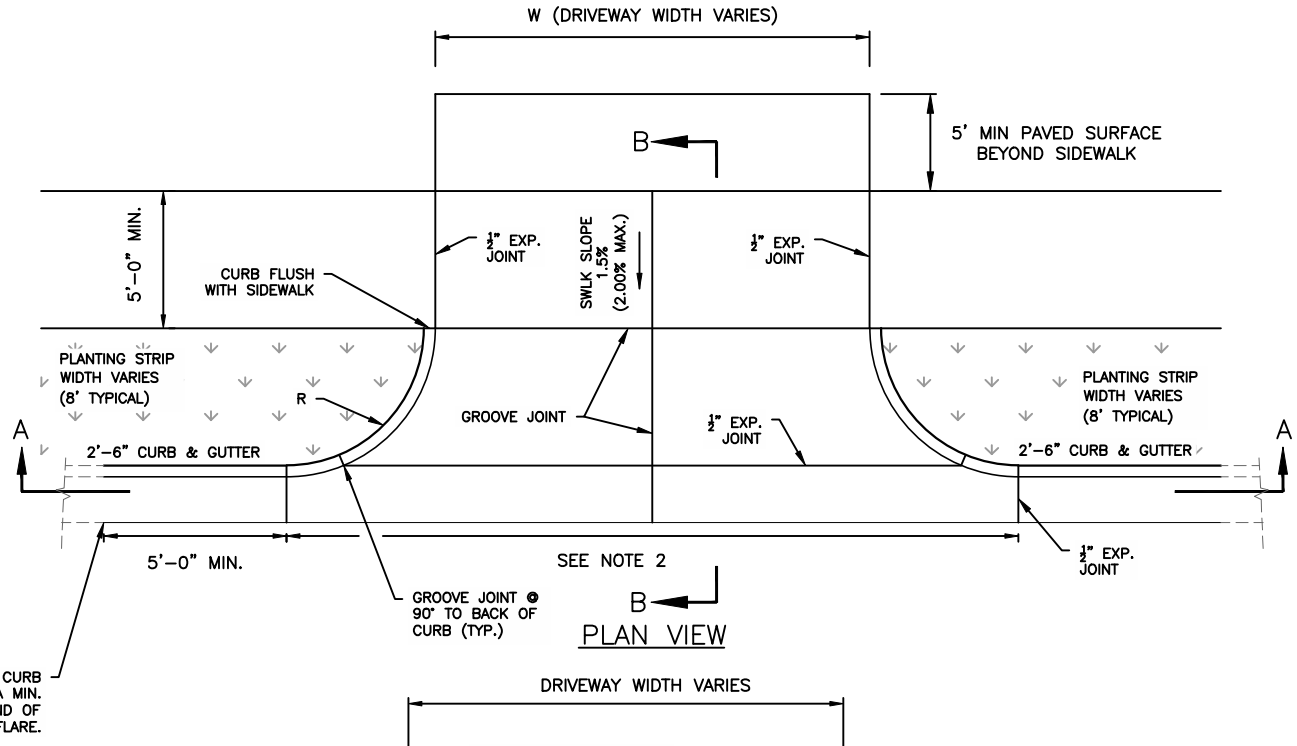

PLAN VIEW

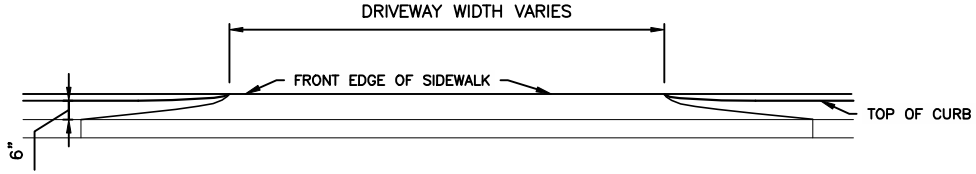

SECTION A – A

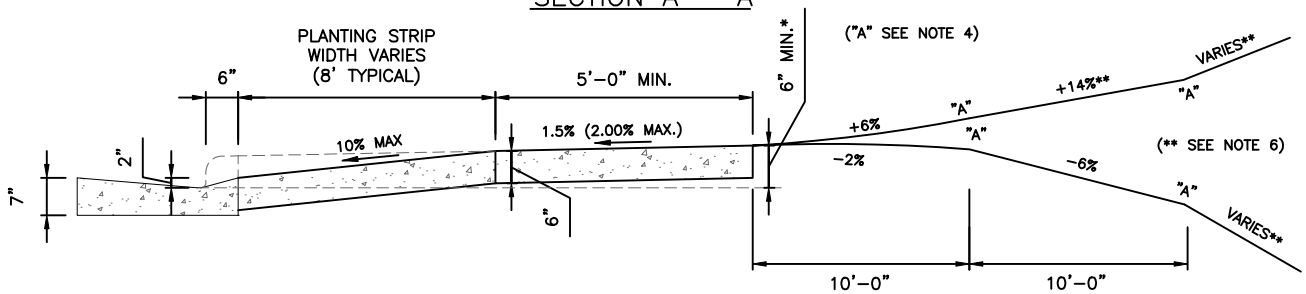

SECTION B – B

NOT TO SCALE

Concord NORTH CAROLINA High Performance Living

RADIUS CURB RAMP TYPE DRIVEWAY PLANTING STRIP & 2'–6" CURB AND GUTTER

3–2022

DRV–103

SHEET 1 OF 1

NOTES:

1. ALL CONCRETE TO BE 3600 P.S.I.
2. ALL CURB OR CURB AND GUTTER AND SIDEWALKS ARE TO BE REMOVED TO THE NEAREST JOINT BEYOND NEW CONSTRUCTION OR CUT WITH A SAW AND REMOVED. SAW CUT OR JOINT TO BE PERPENDICULAR TO EDGE OF EXISTING PAVEMENT.
3. ALL DRIVEWAYS MUST MEET THE CURRENT CITY DRIVEWAY REGULATIONS AND NCDOT REQUIREMENTS FOR SPACING, SIGHT DISTANCE AND OFFSETS FROM PROPERTY LINES AND INTERSECTIONS.
4. "A" – BREAKOVER SHALL BE 8% OR LESS (A = ALGEBRAIC DIFFERENCE).
5. PRIOR APPROVAL IS REQUIRED ON GRADES EXCEEDING WHAT ARE SHOWN.
6. ** – PER NC IFC SECTION D103.2, FIRE APPARATUS ACCESS ROADS SHALL NOT EXCEED 10 PERCENT IN GRADE.
7. JOINT MATERIAL SHOULD BE PLACED FLUSH WITH CONCRETE.
8. * – THE DRIVEWAY MUST RISE 6" FROM THE GUTTER LINE TO PREVENT RUNOFF FROM ENTERING DRIVEWAY.
9. REFER TO TSM AND STD. DRV–100 AND DRV–101 FOR ASSOCIATED DIMENSIONS AND LOCATION INFORMATION.
10. PRIOR APPROVAL IS REQUIRED BEFORE LOCATING SIDEWALK AT BACK OF CURB.

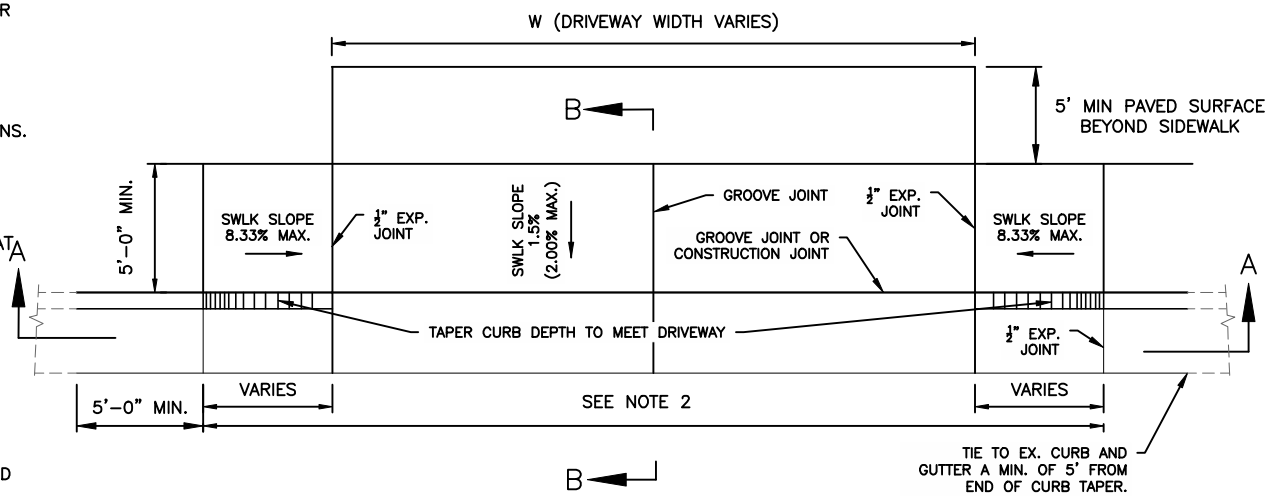

PLAN VIEW

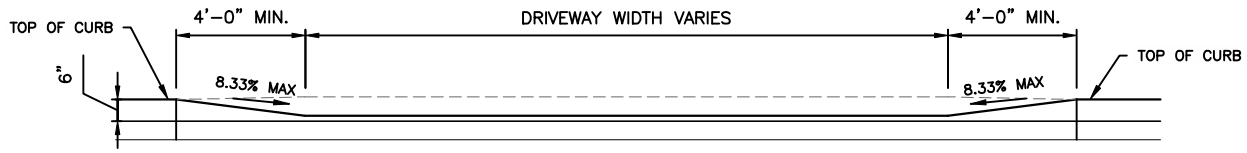

SECTION A – A

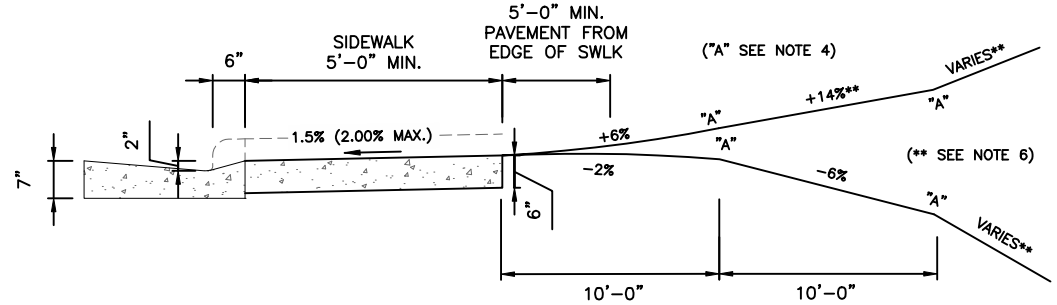

SECTION B – B

NOT TO SCALE

Concord NORTH CAROLINA High Performance Living

RESIDENTIAL RAMP TYPE DRIVEWAY ADJACENT TO 2'–6" CURB AND GUTTER

3–2022

DRV–104

SHEET 1 OF 1

NOTES:

1. WHERE A STREET TYPE DRIVEWAY IS APPROVED BY CONCORD TRANSPORTATION THAT CONNECTS TO AN EXISTING SIGNALIZED INTERSECTION, OR AT A LOCATION WHERE A TRAFFIC SIGNAL INSTALLATION IS PROPOSED BASED ON A TRAFFIC IMPACT/SIGNAL WARRANT STUDY, A FULL DEPTH ASPHALT PAVEMENT IS REQUIRED. THIS PAVEMENT DESIGN IS REQUIRED IN THE DRIVEWAY EASEMENT (100-FOOT MINIMUM) TO MAINTAIN DETECTOR LOOPS AND PAVEMENT MARKINGS. A TRAFFIC SIGNAL WILL BE INSTALLED ONLY IF IT IS DETERMINED TO BE NECESSARY BASED ON A TRAFFIC STUDY OF CURRENT CONDITIONS.
2. A CONCRETE GUTTER IS TO BE USED EXCEPT AT EXISTING OR PROPOSED TRAFFIC SIGNAL LOCATIONS. AT THESE LOCATIONS ADDITIONAL DRAINAGE REQUIREMENTS WILL BE NECESSARY TO ELIMINATE THE NEED FOR GUTTER ACROSS THE DRIVEWAY CONNECTIONS.
3. THE DRIVEWAY MUST RISE 6" FROM THE GUTTER LINE TO PREVENT RUNOFF FROM ENTERING DRIVEWAY.
4. ALL DRIVEWAYS MUST MEET THE CURRENT CITY DRIVEWAY REGULATIONS AND NCDOT REQUIREMENTS FOR SPACING, SIGHT DISTANCE, AND OFFSETS FROM PROPERTY LINES AND INTERSECTIONS.
5. TWO (2) CURB RAMPS PER CURB RETURN REQUIRED AT SIGNALIZED INTERSECTIONS.
6. FOUR (4) FOOT GUTTER AND WINGS ARE REQUIRED TO DIRECT WATER ACROSS DRIVE. GUTTER AND WINGS MAY NOT BE REQUIRED IF THE DRIVEWAY GUTTER SLOPE IS GREATER THAN 2%.
7. MAINTAIN UP TO 1.5% (MAX. 2%) CROSS-SLOPE ON THE PEDESTRIAN ACCESS ROUTE BETWEEN CURB RAMPS. CONCRETE IS OPTIONAL FOR THE CROSSWALK AREA IN THE DRIVEWAY.
8. WHERE DRIVEWAY CONNECTS TO AN NCDOT MAINTAINED STREET, NCDOT APPROVED CURB RAMPS SHOULD BE USED.
9. THE CROSSWALK AREA SHOULD BE GRADED TO ADA STANDARDS WHETHER OR NOT A STRIPED CROSSWALK IS INSTALLED. THE INCLUSION OF A STRIPED CROSSWALK WILL BE ON A CASE BY CASE BASIS.
10. REFER TO STD. DRV-100 & DRV 101 FOR ASSOCIATED DIMENSIONS AND LOCATION INFORMATION

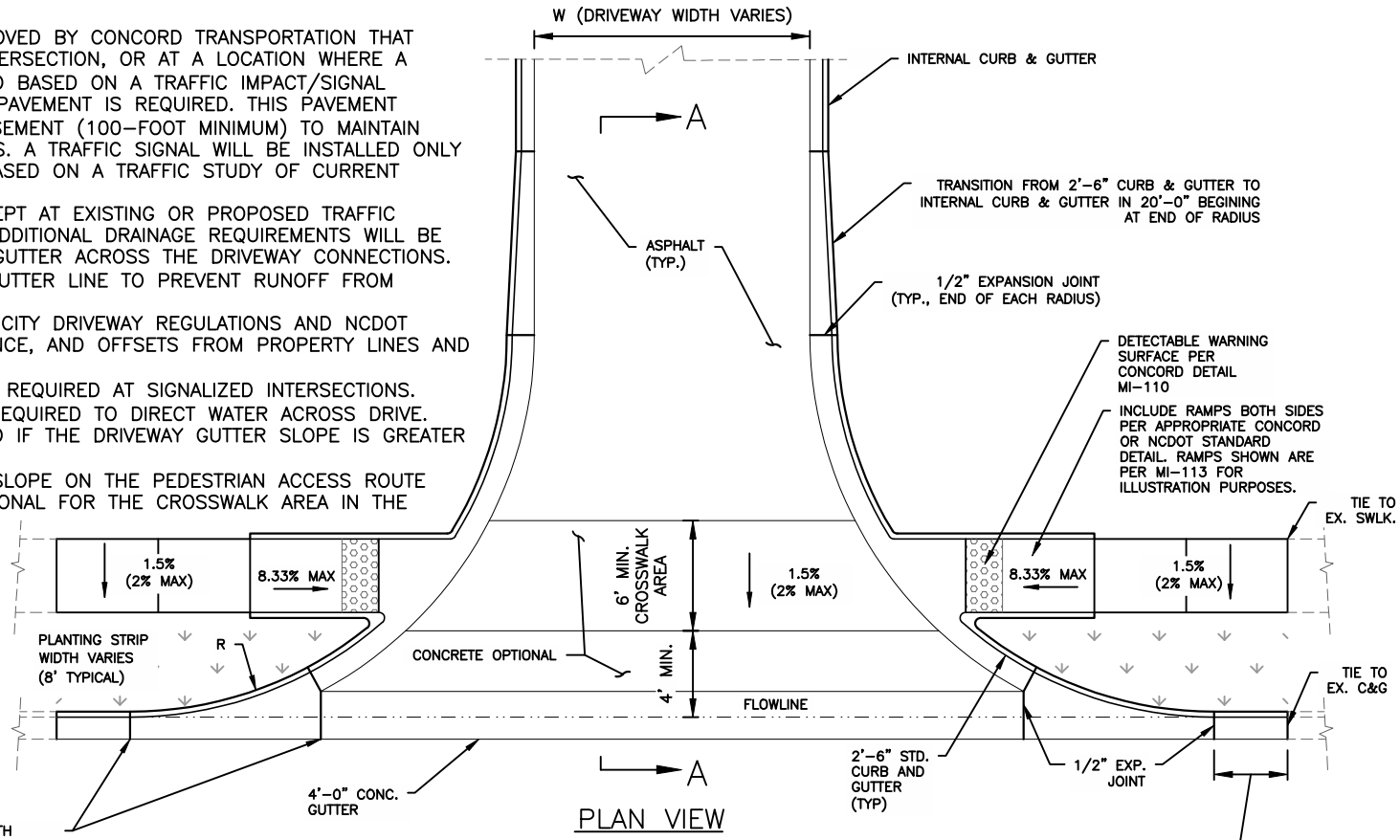

Concord NORTH CAROLINA High Performance Living

STREET TYPE DRIVEWAY
2'-6" STD. CURB AND GUTTER

3-2022

DRV-105

SHEET 1 OF 1

NOTES:

1. ALL CONCRETE TO BE 3600 P.S.I.
2. ALL CURB OR CURB AND GUTTER AND SIDEWALKS ARE TO BE REMOVED TO THE NEAREST JOINT BEYOND NEW CONSTRUCTION OR CUT WITH A SAW AND REMOVED. SAW CUT OR JOINT TO BE PERPENDICULAR TO EDGE OF EXISTING PAVEMENT.
3. ALL DRIVEWAYS MUST MEET THE CURRENT CITY DRIVEWAY REGULATIONS AND NCDOT REQUIREMENTS FOR SPACING, SIGHT DISTANCE AND OFFSETS FROM PROPERTY LINES AND INTERSECTIONS.
4. "A" – BREAKOVER SHALL BE 8% OR LESS (A = ALGEBRAIC DIFFERENCE).
5. PRIOR APPROVAL IS REQUIRED ON GRADES EXCEEDING WHAT ARE SHOWN.
6. ** – PER NC IFC SECTION D103.2, FIRE APPARATUS ACCESS ROADS SHALL NOT EXCEED 10 PERCENT IN GRADE.
7. JOINT MATERIAL SHOULD BE PLACED FLUSH WITH CONCRETE.
8. * – THE DRIVEWAY MUST RISE 6" FROM THE GUTTER LINE TO PREVENT RUNOFF FROM ENTERING DRIVEWAY.
9. REFER TO TSM AND STD. DRV–100 AND DRV–101 FOR ASSOCIATED DIMENSIONS AND LOCATION INFORMATION

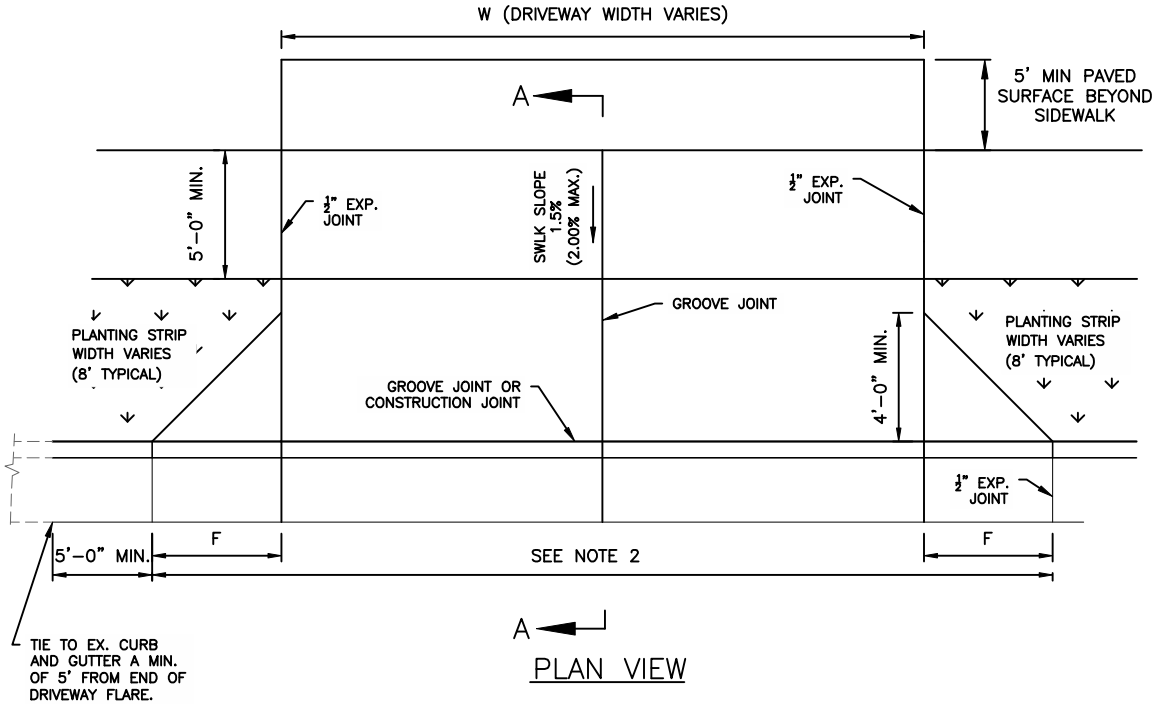

PLAN VIEW

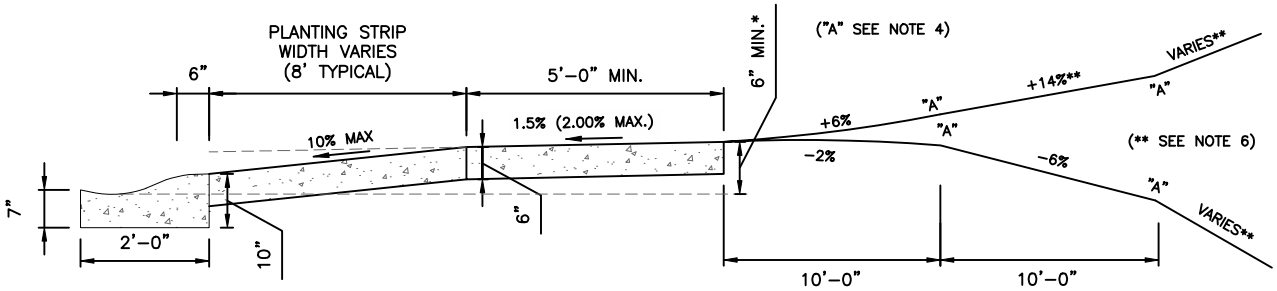

SECTION A – A

NOT TO SCALE

Concord NORTH CAROLINA High Performance Living

RESIDENTIAL RAMP TYPE DRIVEWAY 2'–0" VALLEY CURB AND GUTTER

3–2022

DRV–106

SHEET 1 OF 1

NOTES:

1. ALL CONCRETE TO BE 3600 P.S.I.
2. ALL CURB OR CURB AND GUTTER AND SIDEWALKS ARE TO BE REMOVED TO THE NEAREST JOINT BEYOND NEW CONSTRUCTION OR CUT WITH A SAW AND REMOVED. SAW CUT OR JOINT TO BE PERPENDICULAR TO EDGE OF EXISTING PAVEMENT.
3. ALL DRIVEWAYS MUST MEET THE CURRENT CITY DRIVEWAY REGULATIONS AND NCDOT REQUIREMENTS FOR SPACING, SIGHT DISTANCE AND OFFSETS FROM PROPERTY LINES AND INTERSECTIONS.
4. "A" – BREAKOVER SHALL BE 8% OR LESS (A = ALGEBRAIC DIFFERENCE).
5. PRIOR APPROVAL IS REQUIRED ON GRADES EXCEEDING WHAT ARE SHOWN.
6. ** – PER NC IFC SECTION D103.2, FIRE APPARATUS ACCESS ROADS SHALL NOT EXCEED 10 PERCENT IN GRADE.
7. JOINT MATERIAL SHOULD BE PLACED FLUSH WITH CONCRETE.
8. TO BE USED ON ROADS WITHOUT CURB AND GUTTER WHERE CURB AND GUTTER IS NOT BEING INSTALLED (MUST MEET BOTH CRITERIA).
9. REFER TO TSM AND STD. DRV–100 AND DRV–101 FOR ASSOCIATED DIMENSIONS AND LOCATION INFORMATION.
10. * MINIMUM COVER IS 8" WHEN CLASS IV RCP IS USED. WHERE A DIFFERENT MATERIAL IS APPROVED THE MINIMUM COVER WILL BE DETERMINED ON A CASE BY CASE BASIS.
11. THE PIPE SHALL BE A MINIMUM DIAMETER OF 15" REINFORCED CONCRETE A LARGER PIPE SIZE MAY BE REQUIRED WHERE DETERMINED BY A PROFESSIONAL ENGINEER.
12. THE MINIMUM LENGTH OF THE PIPE IS 20', OR THE LENGTH NEEDED TO EXTEND ONE (1) FOOT BEYOND THE TOE OF A 2:1 SLOPE. SEE SECTION B–B.

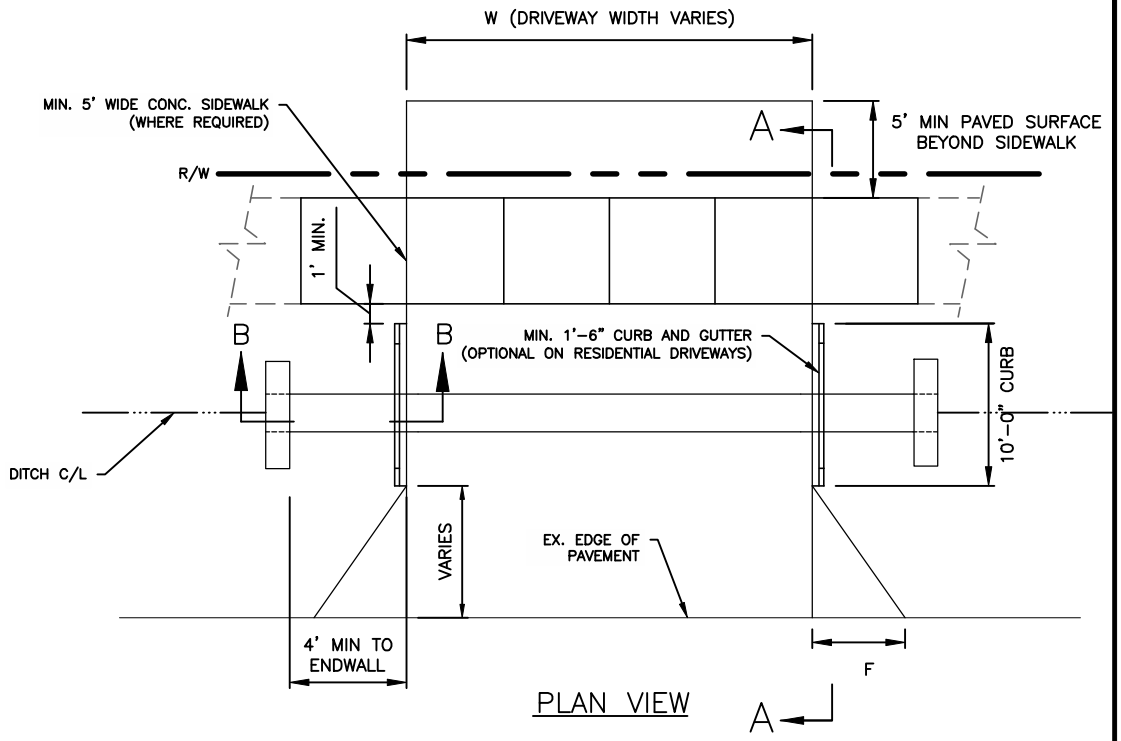

PLAN VIEW

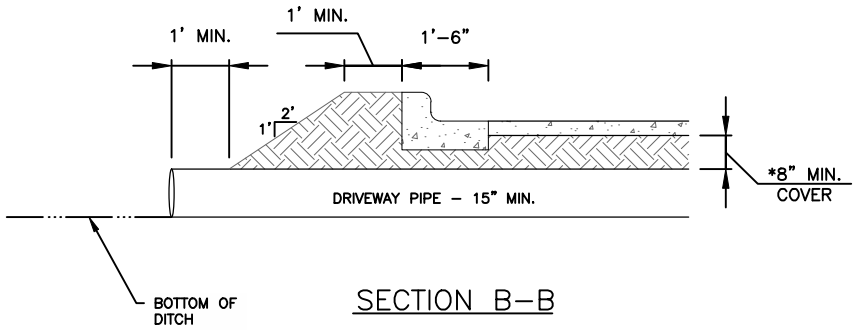

SECTION B–B

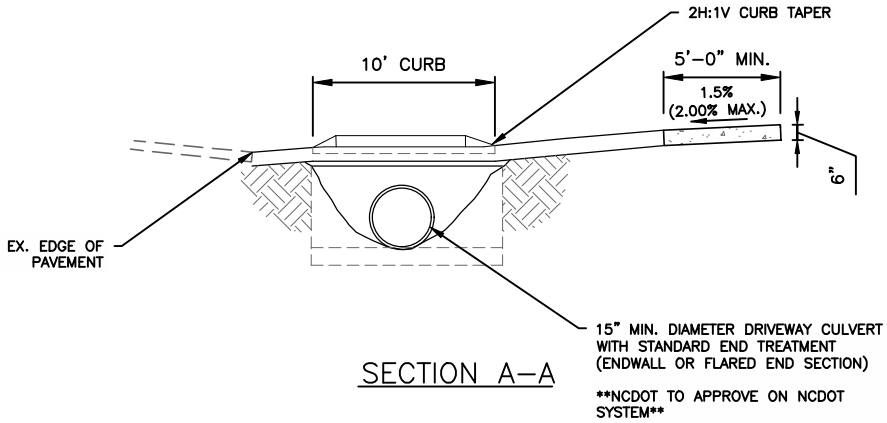

SECTION A–A

NOT TO SCALE

Concord NORTH CAROLINA High Performance Living

RAMP TYPE DRIVEWAY RIBBON PAVEMENT

3–2022

DRV–107

SHEET 1 OF 1

*CONCRETE SHALL BE A MINIMUM OF 6" THICK IN THE RIGHT-OF WAY, MINIMUM 3600 PSI.

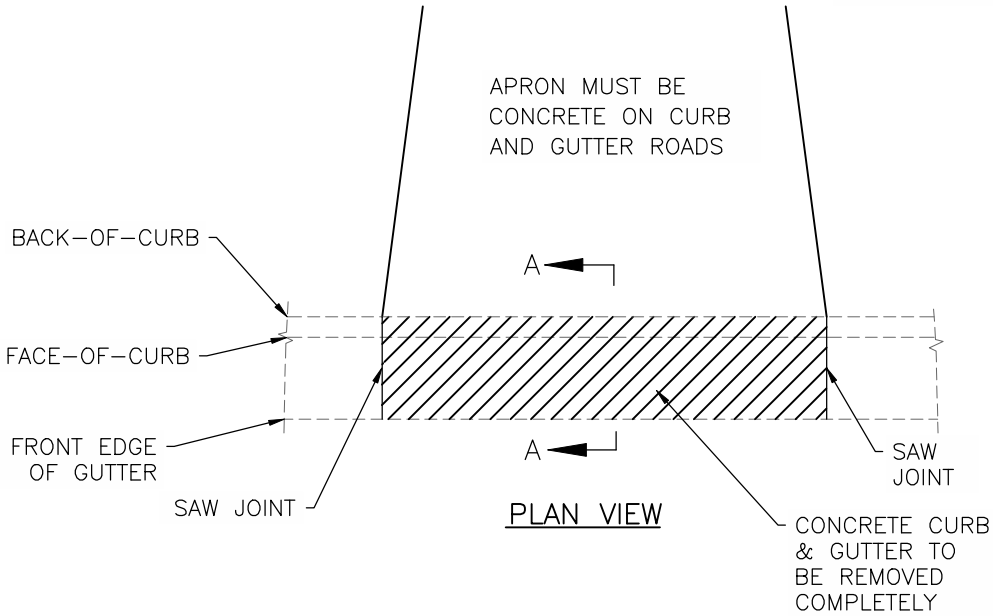

PLAN VIEW

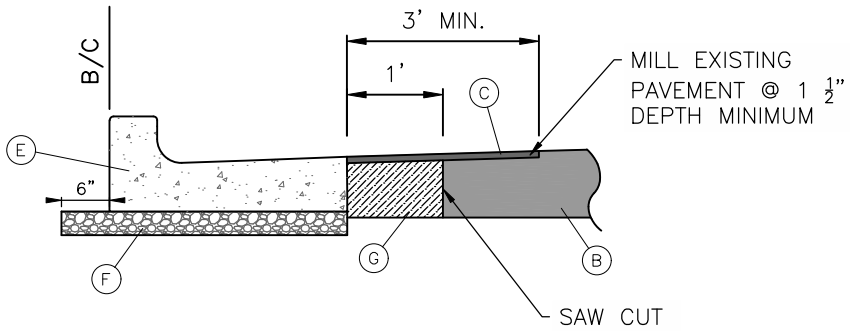

SECTION A – A

NOTES

1. ANY DAMAGED CURB & GUTTER SHALL BE COMPLETELY REMOVED AND REPLACED WITH NEW CONCRETE.
2. ON STREETS WITH A CUL-DE-SAC, THE SAW CUT SHALL BE PERPENDICULAR TO THE FACE OF THE CURB & GUTTER.
3. NO SECTION OF EXISTING CURB & GUTTER WHICH WILL BE LESS THAN 5' SHALL REMAIN. LIMITS OF REMOVAL AND REPLACEMENT SHOULD BE ADJUSTED APPROPRIATELY.

KEY

- (B) EXISTING PAVEMENT STRUCTURE
- (C) MIN. 1 ½" S 9.5B SURFACE COURSE
- (E) 2'-6" STANDARD CURB AND GUTTER SHOWN, APPROPRIATE CURB & GUTTER TO BE DETERMINED BASED ON STREET CLASSIFICATION
- (F) 6" COMPACTED AGGREGATE OR 4" B-25.0C BASE COURSE
- (G) MIN. 8" I-19.0C

NOT TO SCALE

Concord NORTH CAROLINA High Performance Living

CONCRETE CURB & GUTTER DRIVEWAY CUT

3-2022

DRV-108

SHEET 1 OF 1

ACCESSIBLE PARKING REQUIREMENTS

TOTAL PARKING SPACES PROVIDED	MINIMUM NUMBER OF ACCESSIBLE SPACES SPACES REQUIRED	MINIMUM NUMBER OF ACCESSIBLE SPACES REQUIRED TO BE VAN ACCESSIBLE
1 TO 25	1	1
26 TO 50	2	1
51 TO 75	3	1
76 TO 100	4	1
101 TO 150	5	1
151 TO 200	6	1
201 TO 300	7	2
301 TO 400	8	2
401 TO 500	9	2
501 TO 1000	2% OF TOTAL	1 IN EVERY 6 ACCESSIBLE SPACES
1001 AND OVER	20 PLUS 1 FOR EACH 100 OVER 1000	1 IN EVERY 6 ACCESSIBLE SPACES
REFERENCE: SECTION 1106 OF NC BUILDING CODE		

NOTES:

1. ALL ACCESSIBLE SIGNS (R7–8P, R7–8, R7–1, AND 50.10C) SHALL BE MOUNTED AT 7 FEET FROM GRADE TO BOTTOM EDGE OF SIGN FACE (PER MUTCD). MOUNTING HEIGHT CAN BE REDUCED TO 5 FEET IF PLACED IN AN AREA BETWEEN SIDEWALK AND BUILDING FACE IN WHICH PEDESTRIANS ARE NOT EXPECTED TO USE.
2. IF ACCESSIBLE ROUTE IS A RAISED SIDEWALK AREA, THEN RAMPS ARE REQUIRED AT LOADING ZONE AREA. MAINTAIN MIN. 4' WIDE CONTINUOUS PASSAGE.
3. VERTICAL CLEARANCE FOR VANS MUST BE GREATER THAN 98–INCHES.
4. THIS DETAIL IS TO PROVIDE GENERAL GUIDANCE FOR PARKING LAYOUT AND DESIGN; REFER TO MANUAL ON UNIFORM TRAFFIC CONTROL DEVICES (MUTCD) U.S. DEPARTMENT OF TRANSPORTATION AND NORTH CAROLINA DEPARTMENT OF TRANSPORTATION SUPPLEMENT AND NC BUILDING CODE FOR ADDITIONAL INFORMATION.

PARKING SPACE PAVEMENT MARKINGS

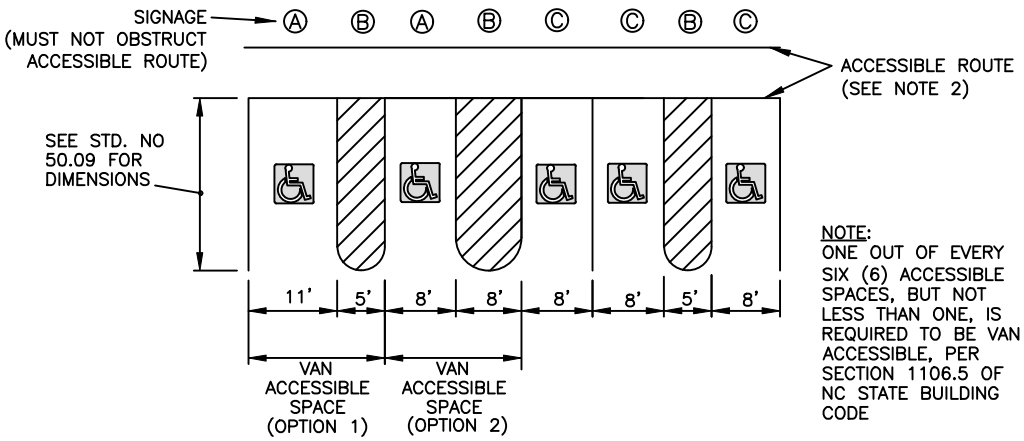

NOTE:
ONE OUT OF EVERY SIX (6) ACCESSIBLE SPACES, BUT NOT LESS THAN ONE, IS REQUIRED TO BE VAN ACCESSIBLE, PER SECTION 1106.5 OF NC STATE BUILDING CODE

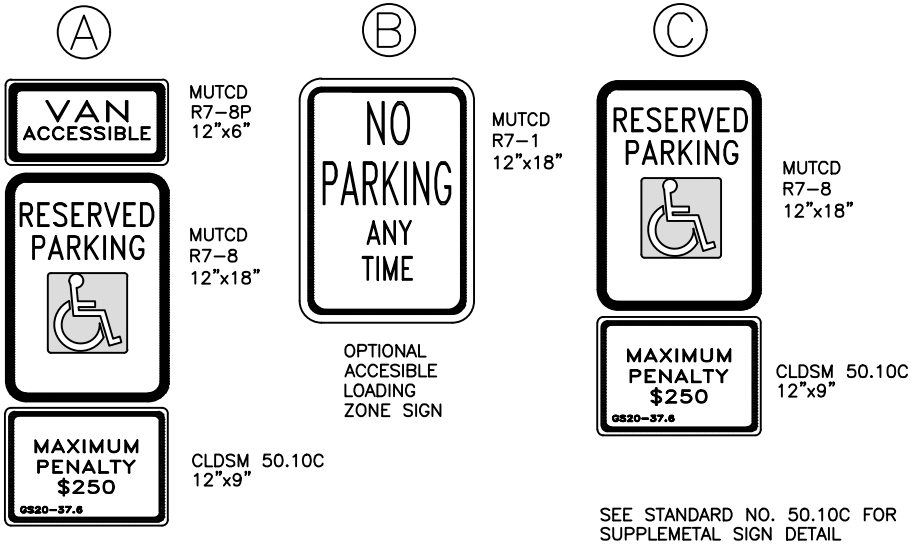

SEE STANDARD NO. 50.10C FOR SUPPLEMETAL SIGN DETAIL

NOT TO SCALE

Concord NORTH CAROLINA High Performance Living

ACCESSIBLE PARKING AND SIGNAGE STANDARDS

3–2022

DRV–120

SHEET 1 OF 1

STANDARD SIZE SPACES						
A	B	C	D	E	F	G
45°	9.0'	18.0'	12.0' ONE-WAY	8.0'	51.0'	2.0'/4.0'
60°	9.0'	18.0'	18.0' ONE-WAY	8.0'	58.0'	2.0'/4.0'
90°	9.0'	18.0'	24.0' TWO-WAY	8.0'	60.0'	2.0'/4.0'
COMPACT SPACES						
A	B	C	D	E	F	G
45°	8.0'	16.0'	N/A	8.0'	N/A	1.5'/3.0'
60°	8.0'	16.0'	N/A	8.0'	N/A	1.5'/3.0'
90°	8.0'	16.0'	N/A	8.0'	N/A	1.5'/3.0'

NOTES:

1. PARALLEL PARKING SPACES SHALL BE 9' BY 24' WITH A 20' TWO-WAY ACCESS, OR A 12' ONE-WAY ACCESS.
2. REFER TO STANDARD DRV-120 FOR ADA PARKING AND SIGNAGE STANDARDS.

KEY:

A. PARKING ANGLE
B. STALL WIDTH
C. STALL DEPTH
D. AISLE WIDTH
E. PLANTING ISLAND WIDTH (MIN. WIDTH SHOWN, REFER TO ARTICLE 7 FOR MIN. AREA.
F. PARKING BAY WIDTH
G. BUMPER OVERHANG (FRONT/REAR)

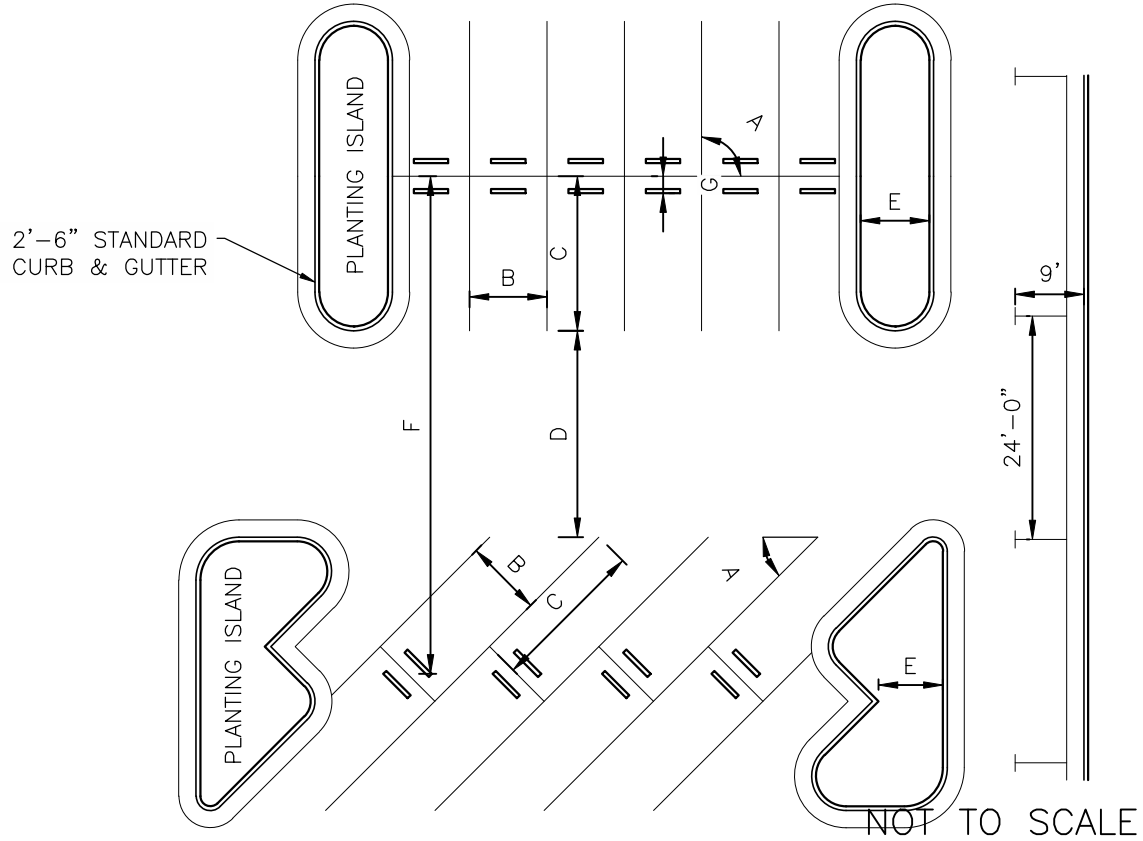

Concord NORTH CAROLINA High Performance Living

STANDARD PARKING DIMENSIONS

3-2022

DRV-121

SHEET 1 OF 1

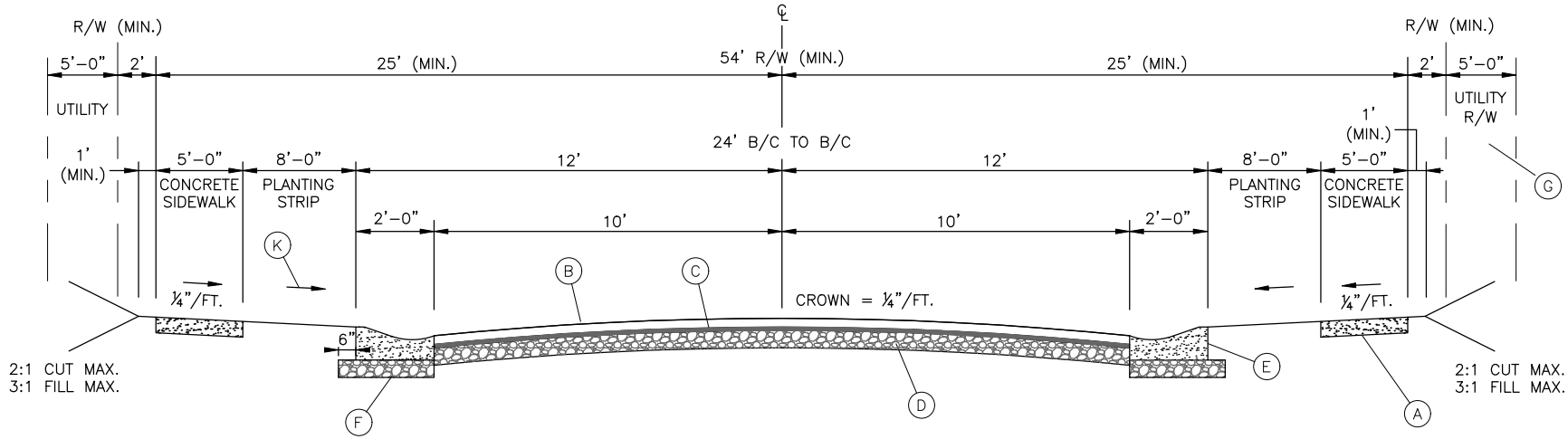

TYPICAL CROSS SECTION

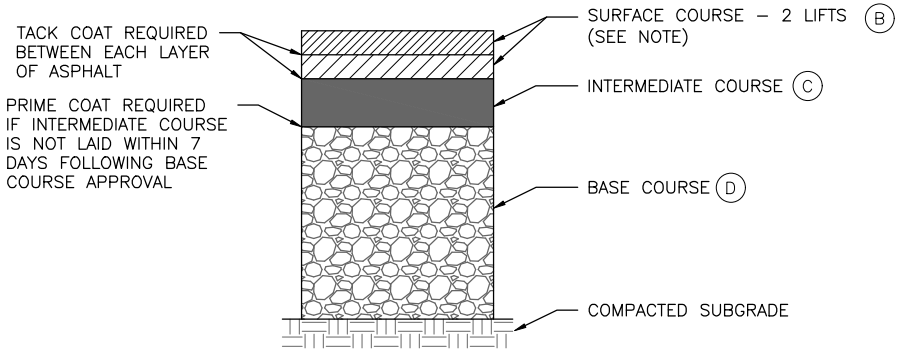

NOTE:
SURFACE COURSE TO BE INSTALLED IN TWO (2) SEPARATE LIFTS A MINIMUM OF 1" THICK. THE FIRST LIFT MUST BE INSTALLED DIRECTLY AFTER INTERMEDIATE COURSE HAS BEEN INSTALLED AND ACCEPTED. THE FINAL LIFT SHOULD BE INSTALLED AFTER ALL OTHER REQUIREMENTS FOR ACCEPTANCE HAVE BEEN MET.

TYPICAL PAVEMENT SECTION

KEY

- (A) 4" SIDEWALK*

  *DRIVEWAY APRON AND SIDEWALK AT DRIVEWAY CROSSINGS SHOULD BE 6" THICK
- (B) 2 ½" S9.5B SURFACE COURSE
- (C) 2.25" I–19.0C INTERMEDIATE COURSE
- (D) 8" COMPACTED AGGREGATE BASE COURSE OR 4" B–25.0C BASE COURSE
- (E) 2'–0" VALLEY GUTTER
- (F) 6" COMPACTED AGGREGATE BASE COURSE OR 4" B–25.0C BASE COURSE
- (G) ADDITIONAL UTILITY R/W OR EASEMENT TO BE DETERMINED BY APPLICABLE PARTIES
- (K) PLANTING STRIP ADJACENT TO SIDEWALK SHALL BE GRADED TO 1/4" PER FOOT (MIN.) TO 1–1/4" PER FOOT (MAX.). PRIOR APPROVAL REQUIRED FOR STEEPER GRADES.

NOT TO SCALE

Concord NORTH CAROLINA
High Performance Living

LOCAL RESIDENTIAL STREET

3–2022
STR–101
SHEET 1 OF 1

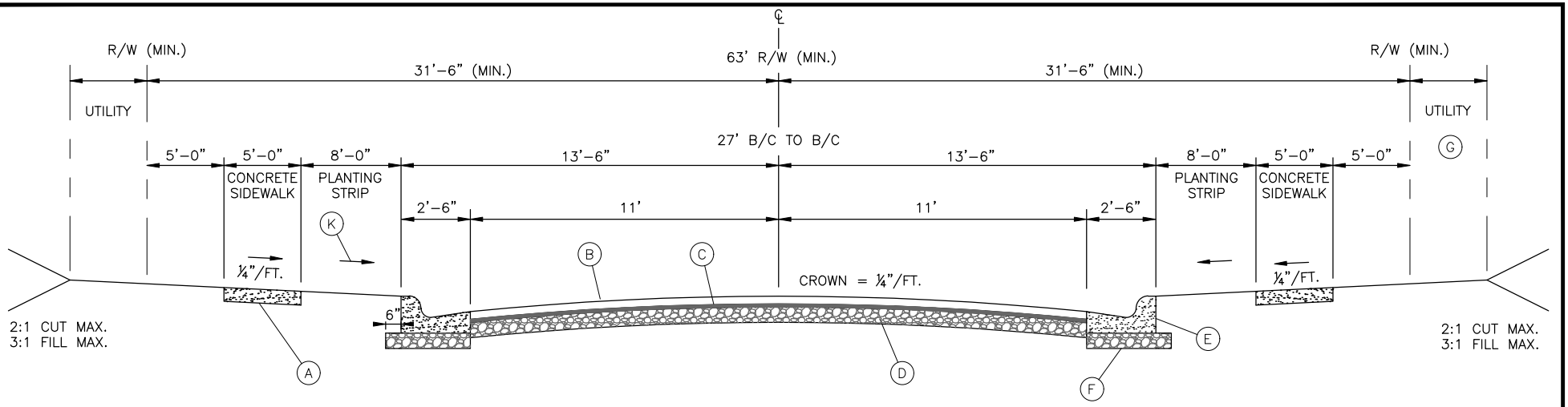

TYPICAL CROSS SECTION

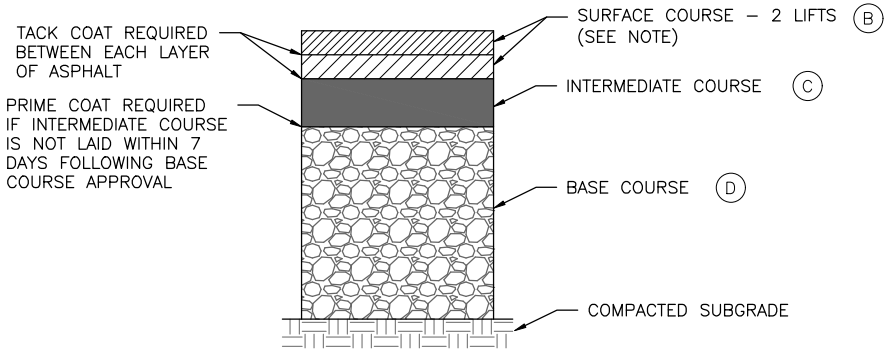

NOTE:
SURFACE COURSE TO BE INSTALLED IN TWO (2) SEPARATE LIFTS A MINIMUM OF 1.5" THICK. THE FIRST LIFT MUST BE INSTALLED DIRECTLY AFTER INTERMEDIATE COURSE HAS BEEN INSTALLED AND ACCEPTED. THE FINAL LIFT SHOULD BE INSTALLED AFTER ALL OTHER REQUIREMENTS FOR ACCEPTANCE HAVE BEEN MET.

TYPICAL PAVEMENT SECTION

KEY

(A) 4" SIDEWALK

*DRIVEWAY APRON AND SIDEWALK AT DRIVEWAY CROSSINGS SHOULD BE 6" THICK

(B) 3" S9.5B SURFACE COURSE

(C) 2.25" I–19.0C INTERMEDIATE COURSE

(D) 10" COMPACTED AGGREGATE BASE COURSE OR 5" B–25.0C

(E) 2'–6" STANDARD CURB AND GUTTER

(F) 6" COMPACTED AGGREGATE BASE COURSE OR 4" B–25.0C BASE COURSE

(G) ADDITIONAL UTILITY R/W OR EASEMENT TO BE DETERMINED BY APPLICABLE PARTIES

(K) PLANTING STRIP ADJACENT TO SIDEWALK SHALL BE GRADED TO 1/4" PER FOOT (MIN.) TO 1–1/4" PER FOOT (MAX.). PRIOR APPROVAL REQUIRED FOR STEEPER GRADES.

NOT TO SCALE

Concord NORTH CAROLINA High Performance Living

RESIDENTIAL COLLECTOR STREET

3–2022

STR–102

SHEET 1 OF 1

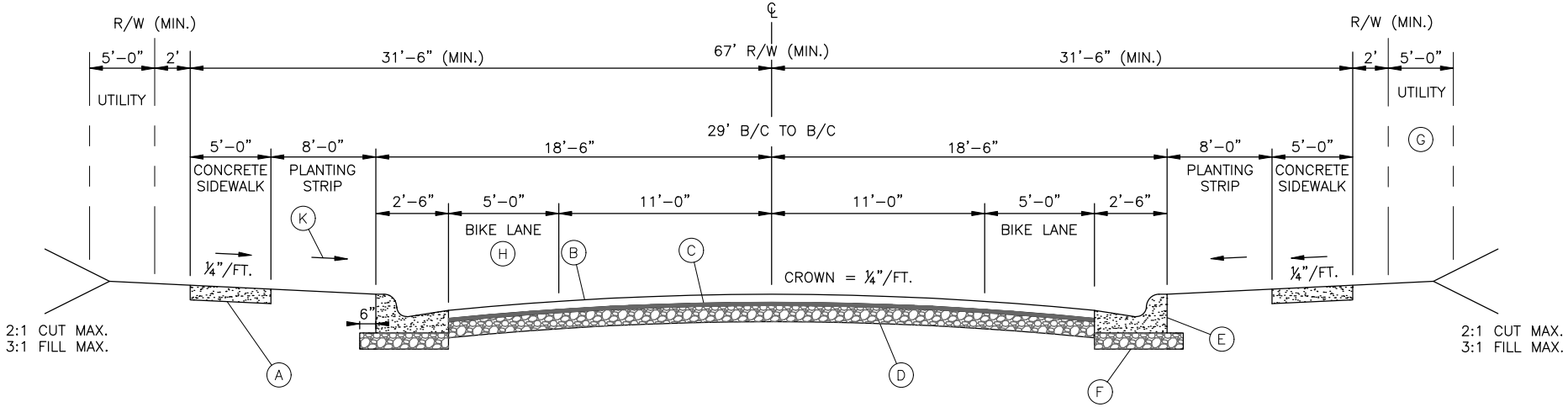

TYPICAL CROSS SECTION

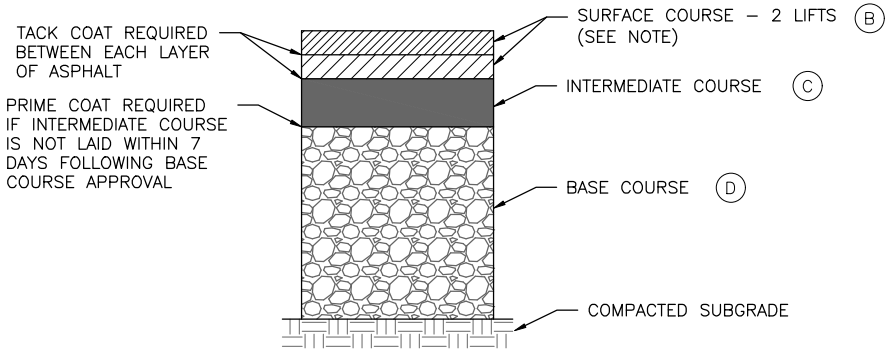

NOTE:
SURFACE COURSE TO BE INSTALLED IN TWO (2) SEPARATE LIFTS A MINIMUM OF 1.5" THICK. THE FIRST LIFT MUST BE INSTALLED DIRECTLY AFTER INTERMEDIATE COURSE HAS BEEN INSTALLED AND ACCEPTED. THE FINAL LIFT SHOULD BE INSTALLED AFTER ALL OTHER REQUIREMENTS FOR ACCEPTANCE HAVE BEEN MET.

TYPICAL PAVEMENT SECTION

KEY

- (A) 4" SIDEWALK
  - *DRIVEWAY APRON AND SIDEWALK AT DRIVEWAY CROSSINGS SHOULD BE 6" THICK
- (B) 3" S9.5B SURFACE COURSE
- (C) 2.25" I–19.0C INTERMEDIATE COURSE
- (D) 10" COMPACTED AGGREGATE BASE COURSE OR 5" B–25.0C
- (E) 2'–6" STANDARD CURB AND GUTTER
- (F) 6" COMPACTED AGGREGATE BASE COURSE OR 4" B–25.0C BASE COURSE
- (G) ADDITIONAL UTILITY R/W OR EASEMENT TO BE DETERMINED BY APPLICABLE PARTIES
- (H) TEMPORARY STRIPING FOR BIKE LANE SHOULD BE INSTALLED ONCE INITIAL SURFACE LIFT IS APPLIED, PERMANENT STRIPING SHOULD BE INSTALLED AFTER FINAL SURFACE LIFT IS APPLIED
- (K) PLANTING STRIP ADJACENT TO SIDEWALK SHALL BE GRADED TO 1/4" PER FOOT (MIN.) TO 1–1/4" PER FOOT (MAX.). PRIOR APPROVAL REQUIRED FOR STEEPER GRADES.

NOT TO SCALE

Concord NORTH CAROLINA
High Performance Living

RESIDENTIAL COLLECTOR STREET WITH BICYCLE LANES

3–2022
STR–103
SHEET 1 OF 1

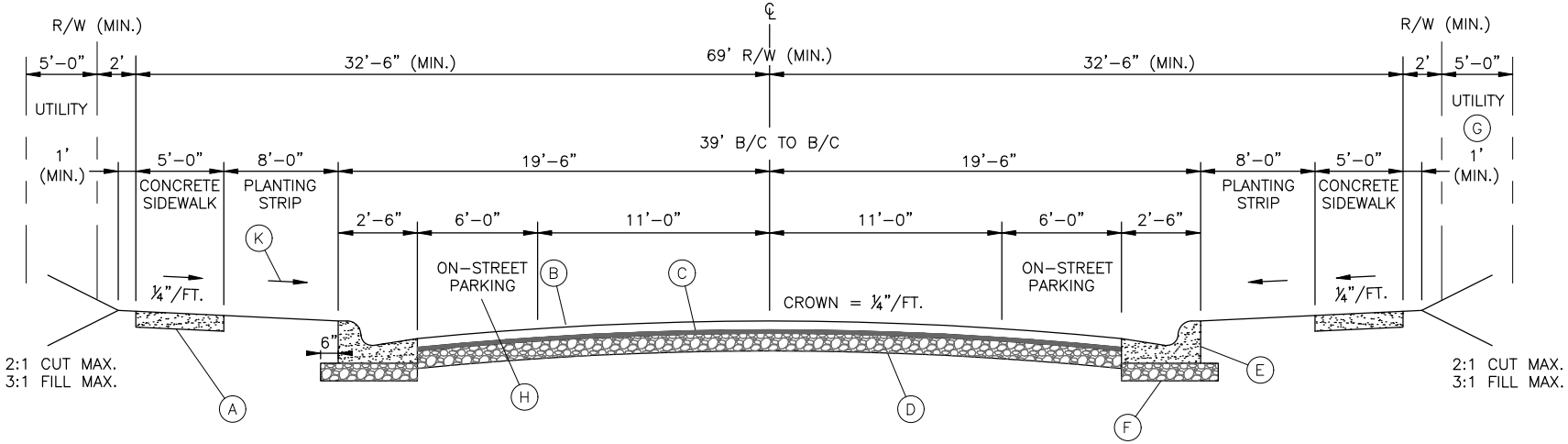

TYPICAL CROSS SECTION

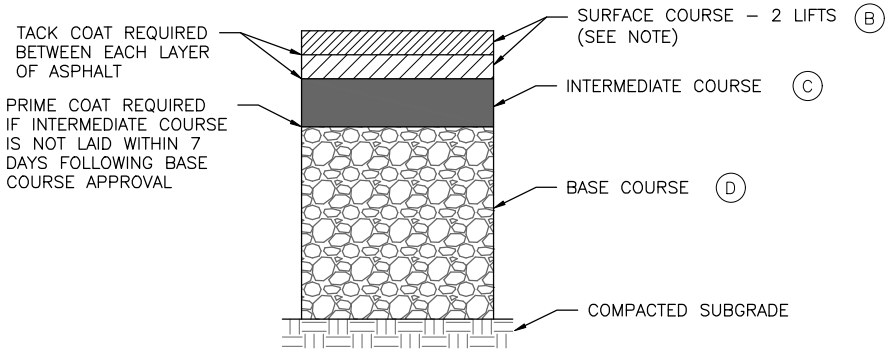

NOTE:
SURFACE COURSE TO BE INSTALLED IN TWO (2) SEPARATE LIFTS A MINIMUM OF 1.5" THICK. THE FIRST LIFT MUST BE INSTALLED DIRECTLY AFTER INTERMEDIATE COURSE HAS BEEN INSTALLED AND ACCEPTED. THE FINAL LIFT SHOULD BE INSTALLED AFTER ALL OTHER REQUIREMENTS FOR ACCEPTANCE HAVE BEEN MET.

TYPICAL PAVEMENT SECTION

KEY

- (A) 4" SIDEWALK
  - *DRIVEWAY APRON AND SIDEWALK AT DRIVEWAY CROSSINGS SHOULD BE 6" THICK
- (B) 3" S9.5B SURFACE COURSE
- (C) 2.25" I–19.0C INTERMEDIATE COURSE
- (D) 10" COMPACTED AGGREGATE BASE COURSE OR 5" B–25.0C
- (E) 2'–6" STANDARD CURB AND GUTTER
- (F) 6" COMPACTED AGGREGATE BASE COURSE OR 4" B–25.0C BASE COURSE
- (G) ADDITIONAL UTILITY R/W OR EASEMENT TO BE DETERMINED BY APPLICABLE PARTIES
- (H) TEMPORARY STRIPING FOR PARKING SHOULD BE INSTALLED ONCE INITIAL SURFACE LIFT IS APPLIED, PERMANENT STRIPING SHOULD BE INSTALLED AFTER FINAL SURFACE LIFT IS APPLIED
- (K) PLANTING STRIP ADJACENT TO SIDEWALK SHALL BE GRADED TO 1/4" PER FOOT (MIN.) TO 1–1/4" PER FOOT (MAX.). PRIOR APPROVAL REQUIRED FOR STEEPER GRADES.

NOT TO SCALE

Concord NORTH CAROLINA
High Performance Living

RESIDENTIAL COLLECTOR STREET WITH PARALLEL PARKING

3–2022
STR–104
SHEET 1 OF 1

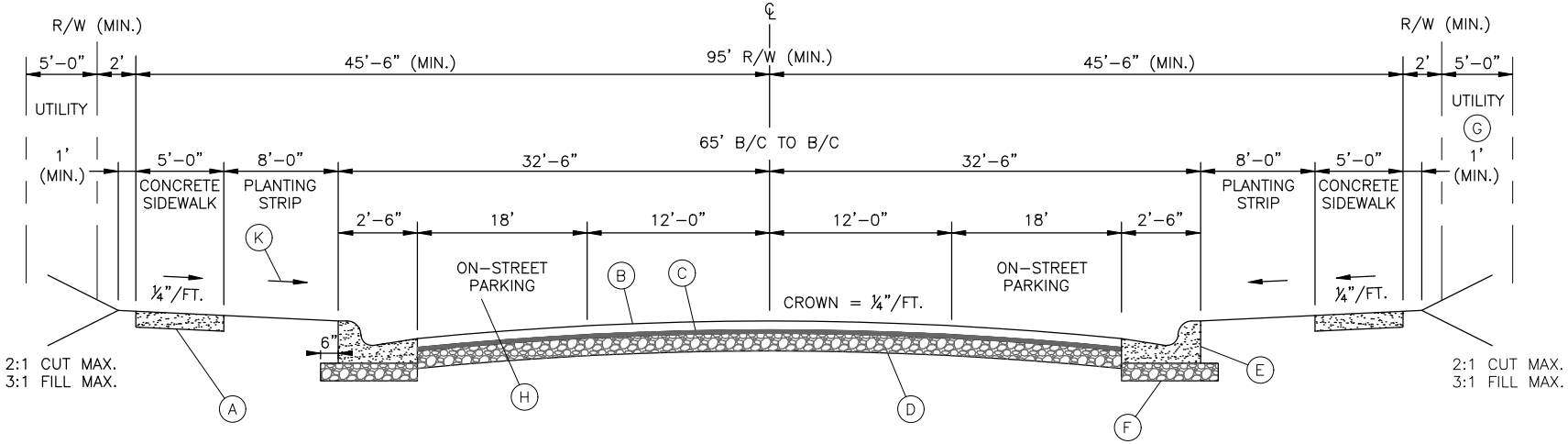

TYPICAL CROSS SECTION

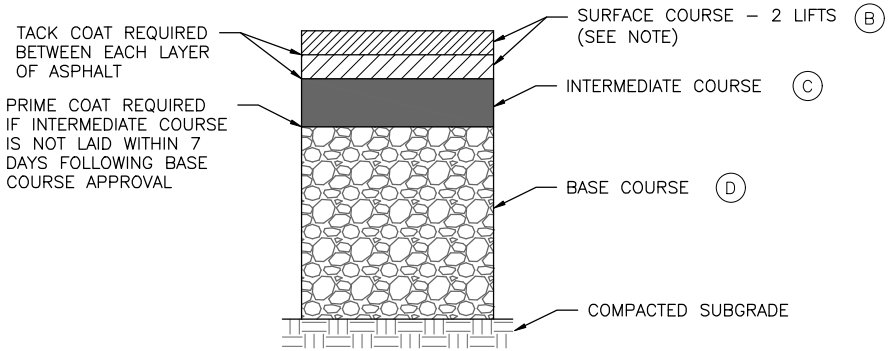

NOTE:
SURFACE COURSE TO BE INSTALLED IN TWO (2) SEPARATE LIFTS A MINIMUM OF 1.5" THICK. THE FIRST LIFT MUST BE INSTALLED DIRECTLY AFTER INTERMEDIATE COURSE HAS BEEN INSTALLED AND ACCEPTED. THE FINAL LIFT SHOULD BE INSTALLED AFTER ALL OTHER REQUIREMENTS FOR ACCEPTANCE HAVE BEEN MET.

TYPICAL PAVEMENT SECTION

KEY

- (A) 4" SIDEWALK
  - *DRIVEWAY APRON AND SIDEWALK AT DRIVEWAY CROSSINGS SHOULD BE 6" THICK
- (B) 3" S9.5B SURFACE COURSE
- (C) 2.25" I–19.0C INTERMEDIATE COURSE
- (D) 10" COMPACTED AGGREGATE BASE COURSE OR 5" B–25.0C
- (E) 2'–6" STANDARD CURB AND GUTTER
- (F) 6" COMPACTED AGGREGATE BASE COURSE OR 4" B–25.0C BASE COURSE
- (G) ADDITIONAL UTILITY R/W OR EASEMENT TO BE DETERMINED BY APPLICABLE PARTIES
- (H) TEMPORARY STRIPING FOR PARKING SHOULD BE INSTALLED ONCE INITIAL SURFACE LIFT IS APPLIED, PERMANENT STRIPING SHOULD BE INSTALLED AFTER FINAL SURFACE LIFT IS APPLIED
- (K) PLANTING STRIP ADJACENT TO SIDEWALK SHALL BE GRADED TO 1/4" PER FOOT (MIN.) TO 1–1/4" PER FOOT (MAX.). PRIOR APPROVAL REQUIRED FOR STEEPER GRADES.

NOT TO SCALE

Concord NORTH CAROLINA High Performance Living

RESIDENTIAL COLLECTOR STREET WITH 45° REVERSE ANGLE PARKING

3–2022
STR–105
SHEET 1 OF 1

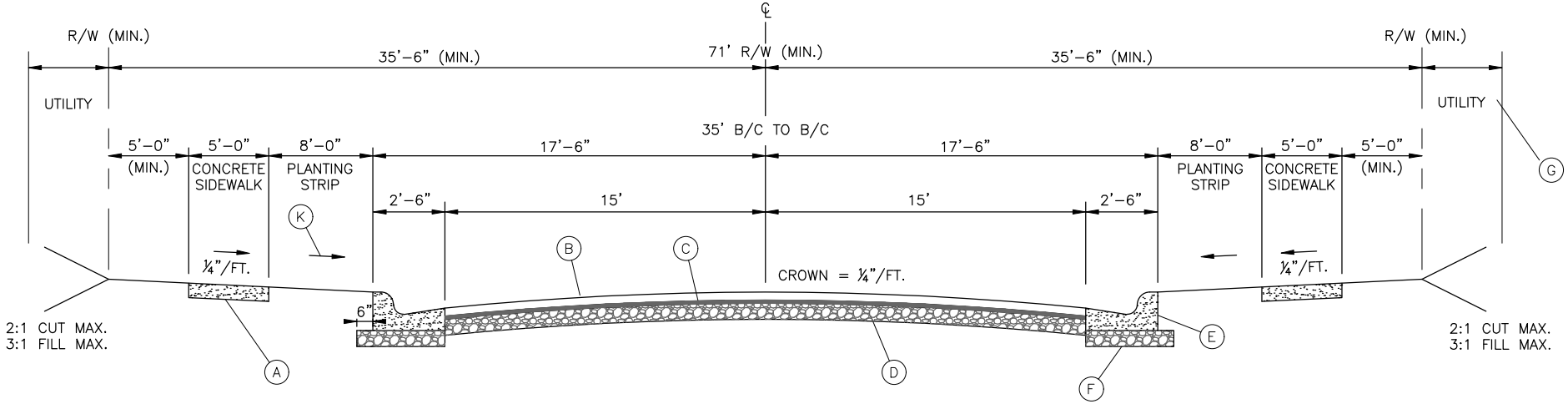

TYPICAL CROSS SECTION

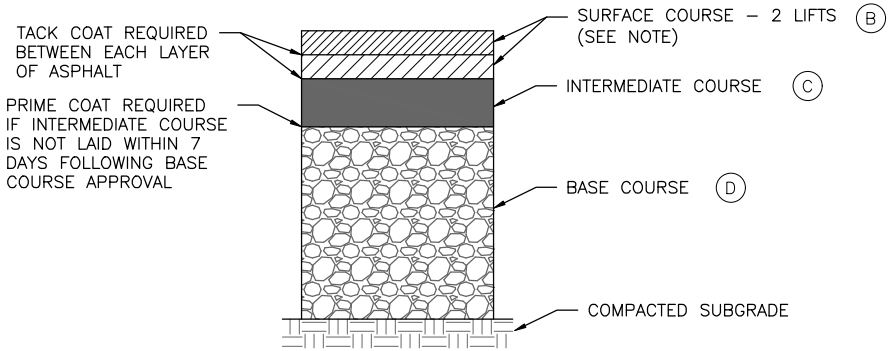

NOTE:
SURFACE COURSE TO BE INSTALLED IN TWO (2) SEPARATE LIFTS A MINIMUM OF 1.5" THICK. THE FIRST LIFT MUST BE INSTALLED DIRECTLY AFTER INTERMEDIATE COURSE HAS BEEN INSTALLED AND ACCEPTED. THE FINAL LIFT SHOULD BE INSTALLED AFTER ALL OTHER REQUIREMENTS FOR ACCEPTANCE HAVE BEEN MET.

TYPICAL PAVEMENT SECTION

KEY

- (A) 4" SIDEWALK
  - *DRIVEWAY APRON AND SIDEWALK AT DRIVEWAY CROSSINGS SHOULD BE 6" THICK
- (B) PER APPROVED PAVEMENT DESIGN (3" S9.5B SURFACE COURSE MIN.)
- (C) PER APPROVED PAVEMENT DESIGN (2.25" I–19.0C INTERMEDIATE COURSE MIN.)
- (D) PER APPROVED PAVEMENT DESIGN (10" COMPACTED AGGREGATE BASE COURSE OR 5" B–25.0C MIN.)
- (E) 2'–6" STANDARD CURB AND GUTTER
- (F) 6" COMPACTED AGGREGATE BASE COURSE OR 4" B–25.0C BASE COURSE
- (G) ADDITIONAL UTILITY R/W OR EASEMENT TO BE DETERMINED BY APPLICABLE PARTIES
- (K) PLANTING STRIP ADJACENT TO SIDEWALK SHALL BE GRADED TO 1/4" PER FOOT (MIN.) TO 1–1/4" PER FOOT (MAX.). PRIOR APPROVAL REQUIRED FOR STEEPER GRADES

NOT TO SCALE

Concord NORTH CAROLINA High Performance Living

NON–RESIDENTIAL COLLECTOR STREET

3–2022

STR–106

SHEET 1 OF 1

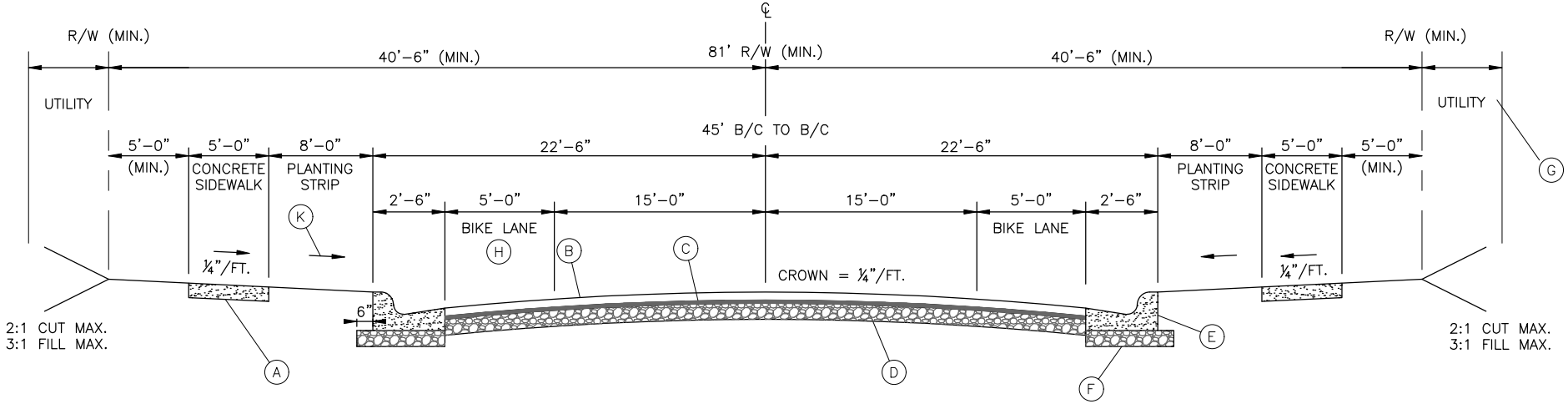

TYPICAL CROSS SECTION

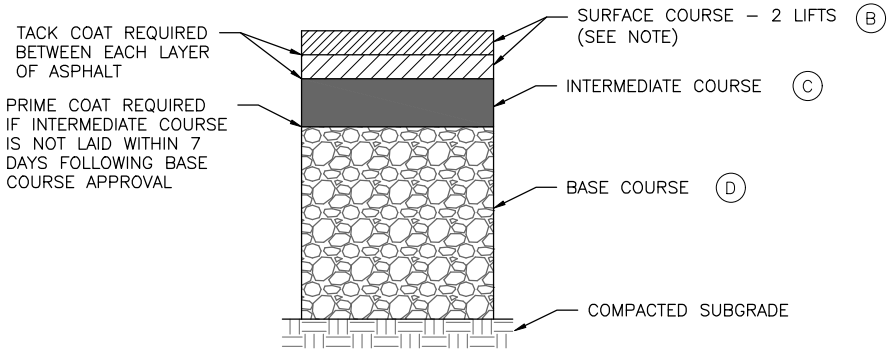

NOTE:
SURFACE COURSE TO BE INSTALLED IN TWO (2) SEPARATE LIFTS A MINIMUM OF 1.5" THICK. THE FIRST LIFT MUST BE INSTALLED DIRECTLY AFTER INTERMEDIATE COURSE HAS BEEN INSTALLED AND ACCEPTED. THE FINAL LIFT SHOULD BE INSTALLED AFTER ALL OTHER REQUIREMENTS FOR ACCEPTANCE HAVE BEEN MET.

TYPICAL PAVEMENT SECTION

KEY

- (A) 4" SIDEWALK
  - *DRIVEWAY APRON AND SIDEWALK AT DRIVEWAY CROSSINGS SHOULD BE 6" THICK
- (B) PER APPROVED PAVEMENT DESIGN (3" S9.5B SURFACE COURSE MIN.)
- (C) PER APPROVED PAVEMENT DESIGN (2.25" I–19.0C INTERMEDIATE COURSE MIN.)
- (D) PER APPROVED PAVEMENT DESIGN (10" COMPACTED AGGREGATE BASE COURSE OR 5" B–25.0C MIN.)
- (E) 2'–6" STANDARD CURB AND GUTTER
- (F) 6" COMPACTED AGGREGATE BASE COURSE OR 4" B–25.0C BASE COURSE
- (G) ADDITIONAL UTILITY R/W OR EASEMENT TO BE DETERMINED BY APPLICABLE PARTIES
- (H) TEMPORARY STRIPING SHOULD BE INSTALLED ONCE INITIAL SURFACE LIFT IS APPLIED, PERMANENT STRIPING SHOULD BE INSTALLED AFTER FINAL SURFACE LIFT IS APPLIED
- (K) PLANTING STRIP ADJACENT TO SIDEWALK SHALL BE GRADED TO 1/4" PER FOOT (MIN.) TO 1–1/4" PER FOOT (MAX.). PRIOR APPROVAL REQUIRED FOR STEEPER GRADES

NOT TO SCALE

Concord NORTH CAROLINA High Performance Living

NON–RESIDENTIAL COLLECTOR STREET WITH BICYCLE LANES

3–2022

STR–107

SHEET 1 OF 1

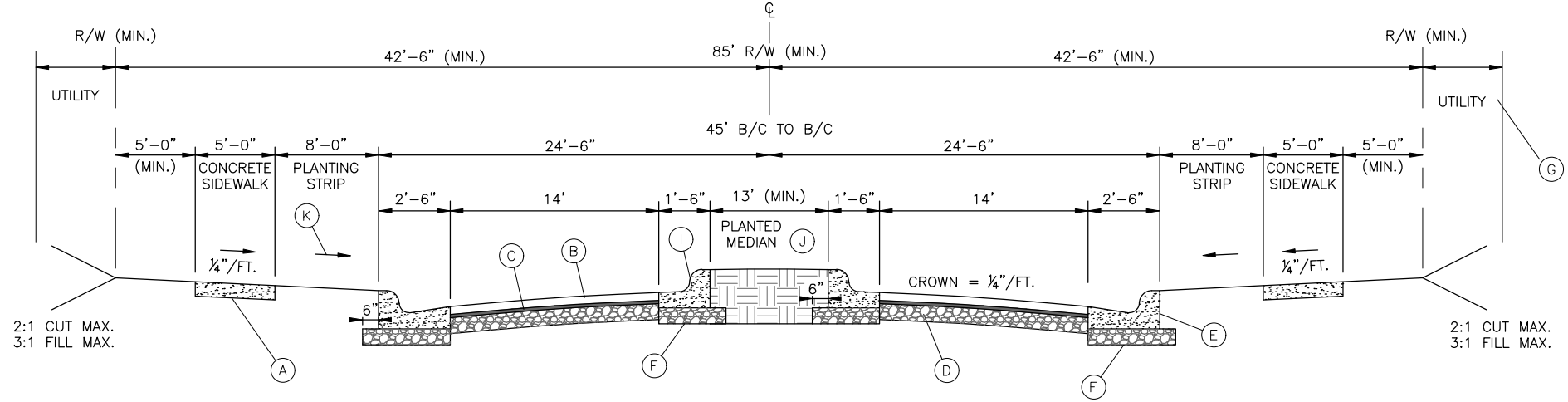

TYPICAL CROSS SECTION

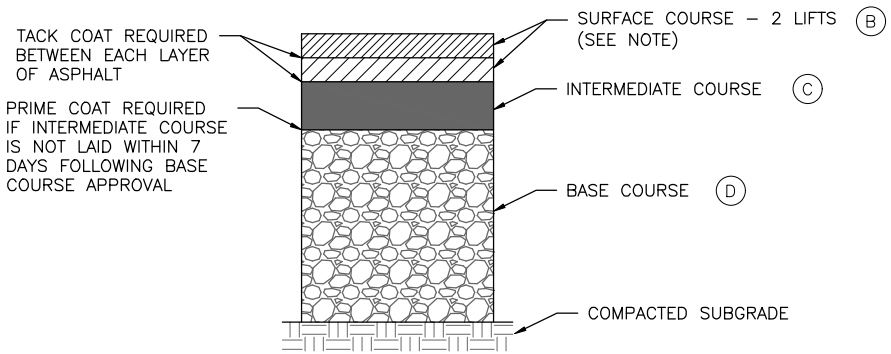

NOTE:
SURFACE COURSE TO BE INSTALLED IN TWO (2) SEPARATE LIFTS A MINIMUM OF 1.5" THICK. THE FIRST LIFT MUST BE INSTALLED DIRECTLY AFTER INTERMEDIATE COURSE HAS BEEN INSTALLED AND ACCEPTED. THE FINAL LIFT SHOULD BE INSTALLED AFTER ALL OTHER REQUIREMENTS FOR ACCEPTANCE HAVE BEEN MET.

TYPICAL PAVEMENT SECTION

KEY

- (A) 4" SIDEWALK

  *DRIVEWAY APRON AND SIDEWALK AT DRIVEWAY CROSSINGS SHOULD BE 6" THICK
- (B) PER APPROVED PAVEMENT DESIGN (3" S9.5B SURFACE COURSE MIN.)
- (C) PER APPROVED PAVEMENT DESIGN (2.25" I–19.0C INTERMEDIATE COURSE MIN.)
- (D) PER APPROVED PAVEMENT DESIGN (10" COMPACTED AGGREGATE BASE COURSE OR 5" B–25.0C MIN.)
- (E) 2'–6" STANDARD CURB AND GUTTER
- (F) 6" COMPACTED AGGREGATE BASE COURSE OR 4" B–25.0C BASE COURSE
- (G) ADDITIONAL UTILITY R/W OR EASEMENT TO BE DETERMINED BY APPLICABLE PARTIES
- (H) TEMPORARY STRIPING SHOULD BE INSTALLED ONCE INITIAL SURFACE LIFT IS APPLIED, PERMANENT STRIPING SHOULD BE INSTALLED AFTER FINAL SURFACE LIFT IS APPLIED
- (I) 1'–6" STANDARD CURB AND GUTTER
- (J) PLANTED MEDIAN, WIDTH VARIES BASED ON PROPOSED PLANTINGS. LANDSCAPING TO BE MAINTAINED BY PROPERTY OWNER'S ASSOCIATION WITH EXECUTED ENCROACHMENT AGREEMENT WITH CITY
- (K) PLANTING STRIP ADJACENT TO SIDEWALK SHALL BE GRADED TO 1/4" PER FOOT (MIN.) TO 1–1/4" PER FOOT (MAX.). PRIOR APPROVAL REQUIRED FOR STEEPER GRADES

NOT TO SCALE

Concord NORTH CAROLINA High Performance Living

NON–RESIDENTIAL COLLECTOR STREET DIVIDED WITH PLANTED MEDIAN

3–2022

STR–108

SHEET 1 OF 1

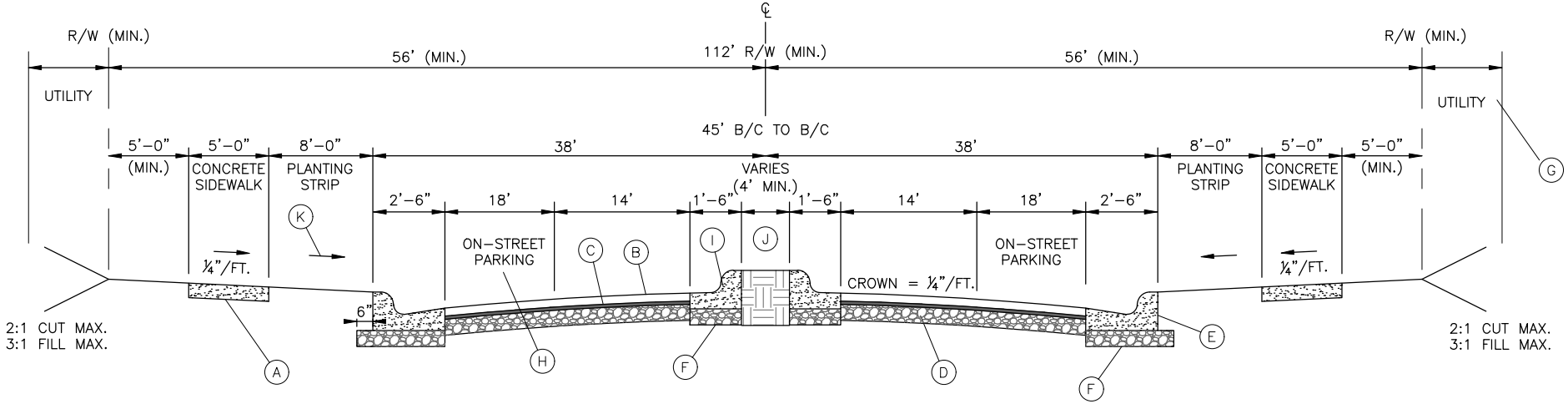

TYPICAL CROSS SECTION

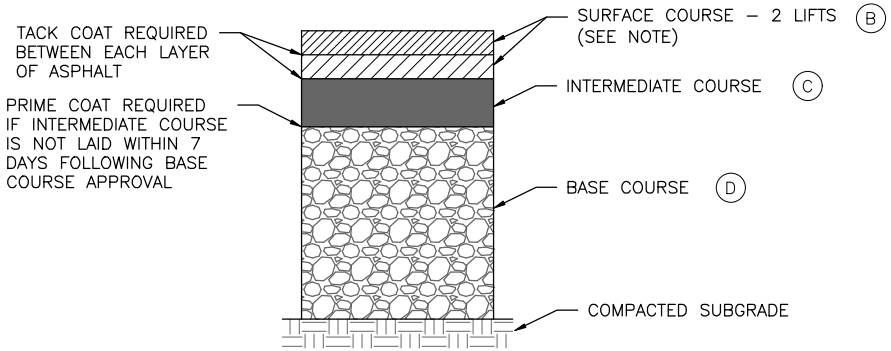

NOTE:
SURFACE COURSE TO BE INSTALLED IN TWO (2) SEPARATE LIFTS A MINIMUM OF 1.5" THICK. THE FIRST LIFT MUST BE INSTALLED DIRECTLY AFTER INTERMEDIATE COURSE HAS BEEN INSTALLED AND ACCEPTED. THE FINAL LIFT SHOULD BE INSTALLED AFTER ALL OTHER REQUIREMENTS FOR ACCEPTANCE HAVE BEEN MET.

TYPICAL PAVEMENT SECTION

KEY

- (A) 4" SIDEWALK

  *DRIVEWAY APRON AND SIDEWALK AT DRIVEWAY CROSSINGS SHOULD BE 6" THICK
- (B) PER APPROVED PAVEMENT DESIGN (3" S9.5B SURFACE COURSE MIN.)
- (C) PER APPROVED PAVEMENT DESIGN (2.25" I-19.0C INTERMEDIATE COURSE MIN.)
- (D) PER APPROVED PAVEMENT DESIGN (10" COMPACTED AGGREGATE BASE COURSE OR 5" B-25.0C MIN.)
- (E) 2'-6" STANDARD CURB AND GUTTER
- (F) 6" COMPACTED AGGREGATE BASE COURSE OR 4" B-25.0C BASE COURSE
- (G) ADDITIONAL UTILITY R/W OR EASEMENT TO BE DETERMINED BY APPLICABLE PARTIES
- (H) TEMPORARY STRIPING SHOULD BE INSTALLED ONCE INITIAL SURFACE LIFT IS APPLIED, PERMANENT STRIPING SHOULD BE INSTALLED AFTER FINAL SURFACE LIFT IS APPLIED
- (I) 1'-6" STANDARD CURB AND GUTTER
- (J) PLANTED MEDIAN, WIDTH VARIES BASED ON PROPOSED PLANTINGS. LANDSCAPING TO BE MAINTAINED BY PROPERTY OWNER'S ASSOCIATION WITH EXECUTED ENCROACHMENT AGREEMENT WITH CITY
- (K) PLANTING STRIP ADJACENT TO SIDEWALK SHALL BE GRADED TO 1/4" PER FOOT (MIN.) TO 1-1/4" PER FOOT (MAX.). PRIOR APPROVAL REQUIRED FOR STEEPER GRADES

NOT TO SCALE

Concord NORTH CAROLINA High Performance Living

NON-RESIDENTIAL COLLECTOR STREET WITH 45° REVERSE ANGLE PARKING

3-2022

STR-109

SHEET 1 OF 1

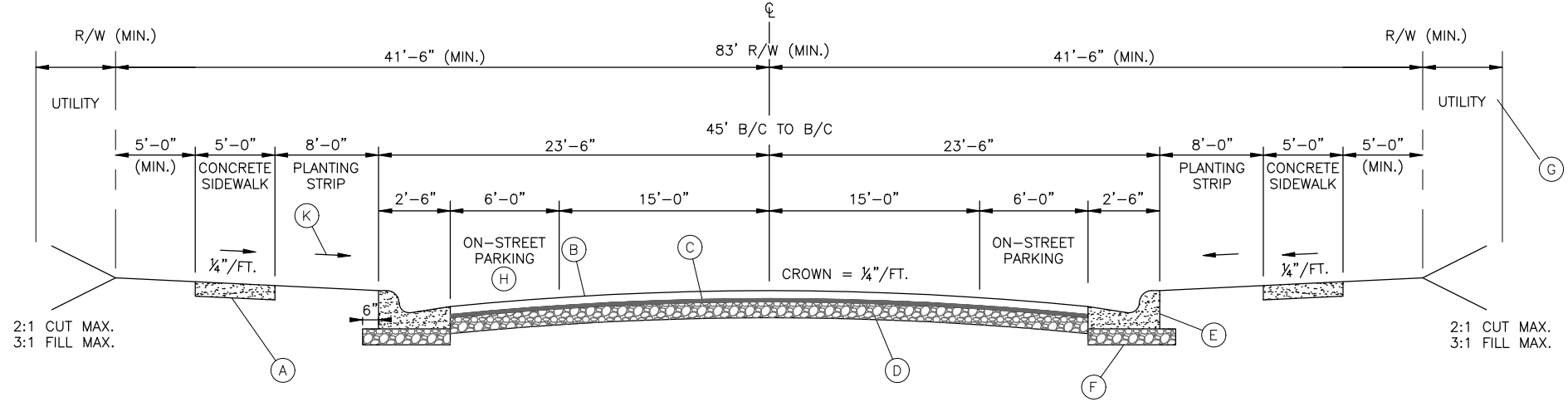

TYPICAL CROSS SECTION

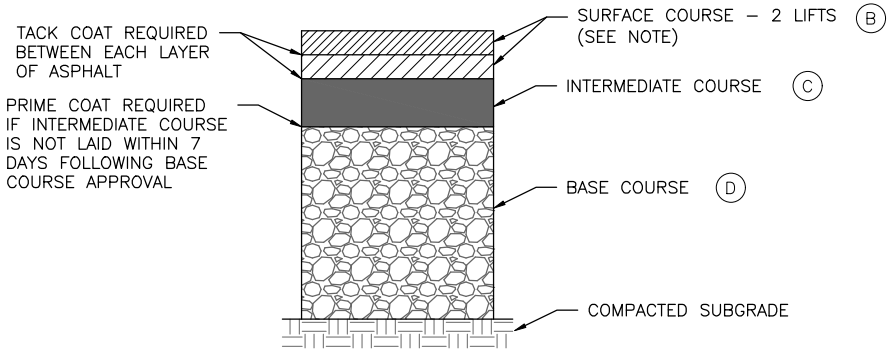

NOTE:
SURFACE COURSE TO BE INSTALLED IN TWO (2) SEPARATE LIFTS A MINIMUM OF 1.5" THICK. THE FIRST LIFT MUST BE INSTALLED DIRECTLY AFTER INTERMEDIATE COURSE HAS BEEN INSTALLED AND ACCEPTED. THE FINAL LIFT SHOULD BE INSTALLED AFTER ALL OTHER REQUIREMENTS FOR ACCEPTANCE HAVE BEEN MET.

TYPICAL PAVEMENT SECTION

KEY

- (A) 4" SIDEWALK
  - *DRIVEWAY APRON AND SIDEWALK AT DRIVEWAY CROSSINGS SHOULD BE 6" THICK
- (B) PER APPROVED PAVEMENT DESIGN (3" S9.5B SURFACE COURSE MIN.)
- (C) PER APPROVED PAVEMENT DESIGN (2.25" I–19.0C INTERMEDIATE COURSE MIN.)
- (D) PER APPROVED PAVEMENT DESIGN (10" COMPACTED AGGREGATE BASE COURSE OR 5" B–25.0C MIN.)
- (E) 2'–6" STANDARD CURB AND GUTTER
- (F) 6" COMPACTED AGGREGATE BASE COURSE OR 4" B–25.0C BASE COURSE
- (G) ADDITIONAL UTILITY R/W OR EASEMENT TO BE DETERMINED BY APPLICABLE PARTIES
- (H) TEMPORARY STRIPING SHOULD BE INSTALLED ONCE INITIAL SURFACE LIFT IS APPLIED, PERMANENT STRIPING SHOULD BE INSTALLED AFTER FINAL SURFACE LIFT IS APPLIED
- (K) PLANTING STRIP ADJACENT TO SIDEWALK SHALL BE GRADED TO 1/4" PER FOOT (MIN.) TO 1–1/4" PER FOOT (MAX.). PRIOR APPROVAL REQUIRED FOR STEEPER GRADES.

NOT TO SCALE

Concord NORTH CAROLINA High Performance Living

NON–RESIDENTIAL COLLECTOR STREET WITH PARALLEL PARKING

3–2022

STR–110

SHEET 1 OF 1

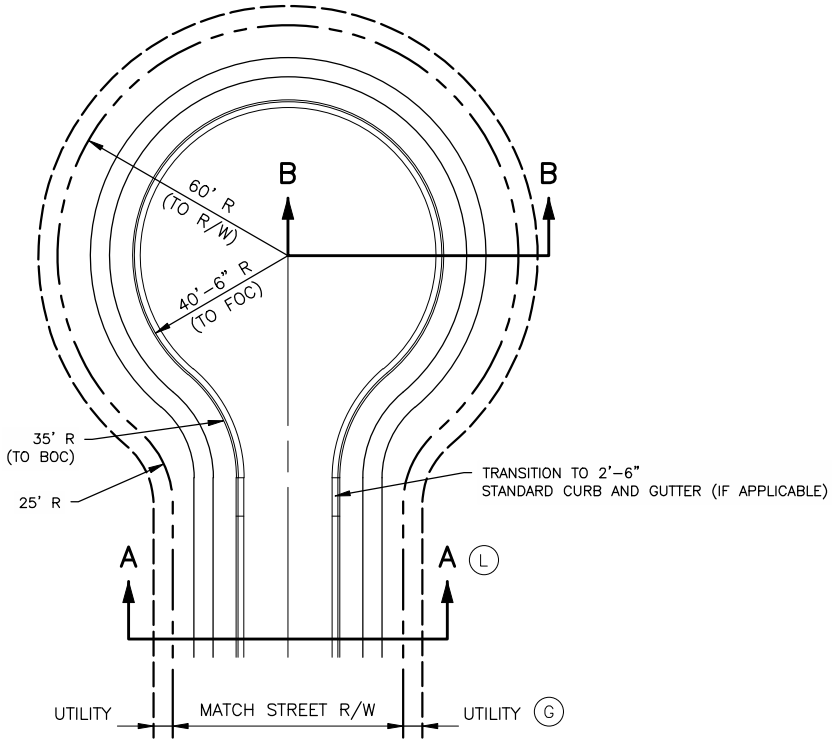

PLAN

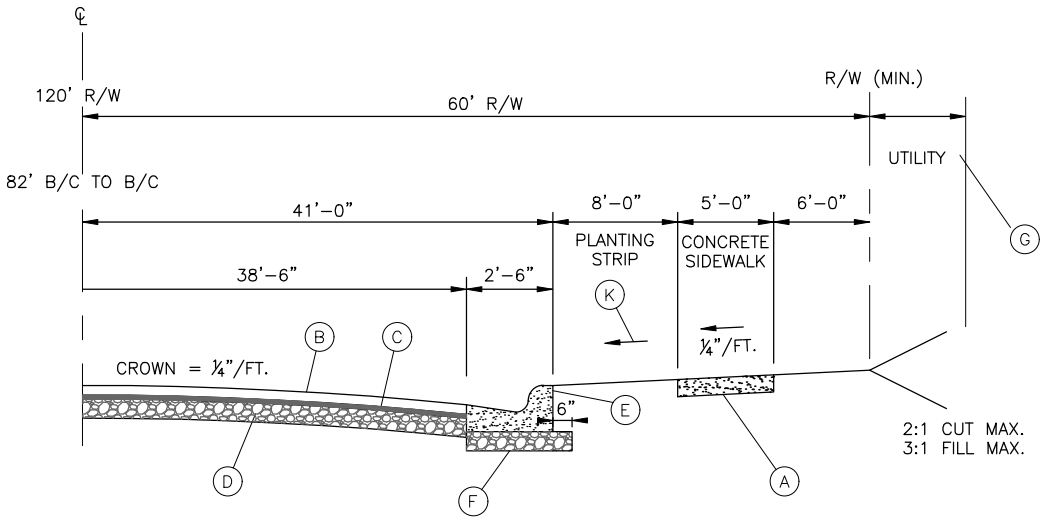

SECTION B – B

NOTES

1. THIS DETAIL ONLY APPLIES TO RESIDENTIAL CUL–DE–SACS WITH A LENGTH LESS THAN 150' FROM THE CENTERLINE OF THE INTERSECTING STREET PROVIDING ACCESS TO THE CENTER TERMINUS OF THE CUL–DE–SAC.

KEY

- (A) 4" SIDEWALK
  - *DRIVEWAY APRON AND SIDEWALK AT DRIVEWAY CROSSINGS SHOULD BE 6" THICK
- (B) TO MATCH TYPICAL SECTION OF ADJOINING STREET
- (C) TO MATCH TYPICAL SECTION OF ADJOINING STREET
- (D) TO MATCH TYPICAL SECTION OF ADJOINING STREET
- (E) 2'–6" STANDARD CURB AND GUTTER
- (F) 6" COMPACTED AGGREGATE BASE COURSE OR 4" B–25.0C BASE COURSE
- (G) ADDITIONAL UTILITY R/W OR EASEMENT TO BE DETERMINED BY APPLICABLE PARTIES
- (K) PLANTING STRIP ADJACENT TO SIDEWALK SHALL BE GRADED TO 1/4" PER FOOT (MIN.) TO 1–1/4" PER FOOT (MAX.). PRIOR APPROVAL REQUIRED FOR STEEPER GRADES
- (L) SECTION A–A TO MATCH ADJOINING STREET CROSS SECTION

NOT TO SCALE

Concord NORTH CAROLINA
High Performance Living

RESIDENTIAL CUL–DE–SAC LENGTH LESS THAN 150'

3–2022

STR–111

SHEET 1 OF 1

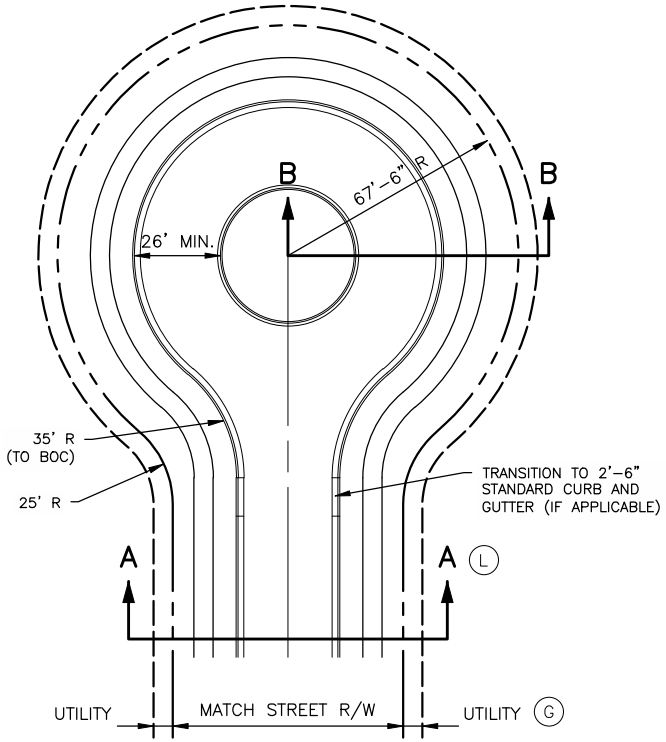

PLAN

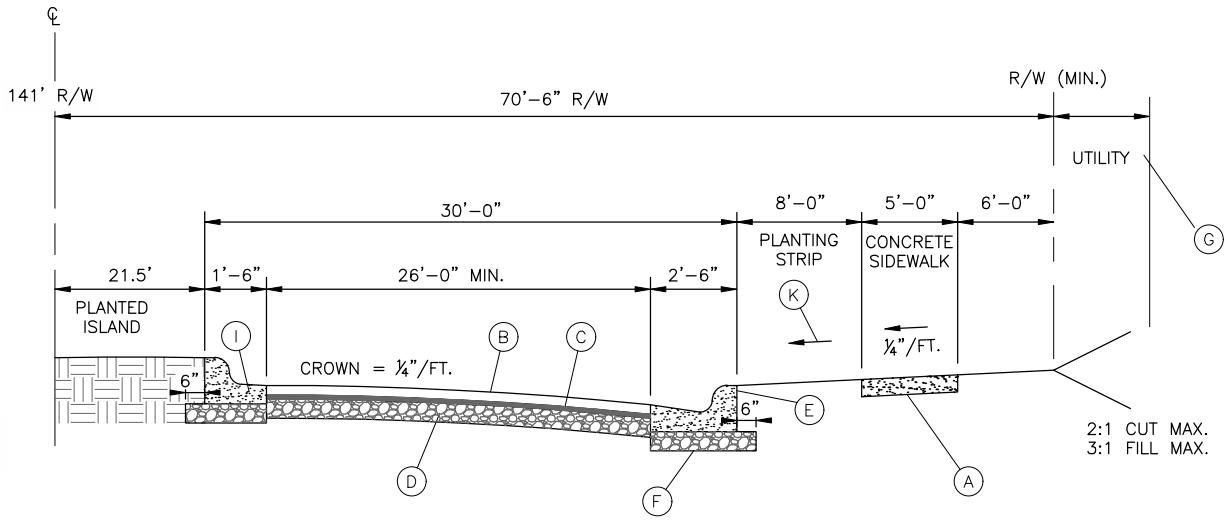

SECTION B – B

KEY

- (A) 4" SIDEWALK
  - *DRIVEWAY APRON AND SIDEWALK AT DRIVEWAY CROSSINGS SHOULD BE 6" THICK
- (B) TO MATCH TYPICAL SECTION OF ADJOINING STREET
- (C) TO MATCH TYPICAL SECTION OF ADJOINING STREET
- (D) TO MATCH TYPICAL SECTION OF ADJOINING STREET
- (E) 2'-6" STANDARD CURB AND GUTTER
- (F) 6" COMPACTED AGGREGATE BASE COURSE OR 4" B-25.0C BASE COURSE
- (G) ADDITIONAL UTILITY R/W OR EASEMENT TO BE DETERMINED BY APPLICABLE PARTIES
- (I) 1'-6" STANDARD CURB AND GUTTER
- (K) PLANTING STRIP ADJACENT TO SIDEWALK SHALL BE GRADED TO 1/4" PER FOOT (MIN.) TO 1-1/4" PER FOOT (MAX.). PRIOR APPROVAL REQUIRED FOR STEEPER GRADES
- (L) SECTION A-A TO MATCH ADJOINING STREET CROSS SECTION

NOTES

1. THIS DETAIL APPLIES TO RESIDENTIAL CUL-DE-SACS WITH A LENGTH GREATER THAN 150' FROM THE CENTERLINE OF THE INTERSECTING STREET PROVIDING ACCESS TO THE CENTER TERMINUS OF THE CUL-DE-SAC.
2. PLANTINGS IN ISLAND SHOULD BE GRASS/SHRUBS WITH A MAXIMUM MATURE HEIGHT OF 3'. TREES WITH WITH A CANOPY OF 8' OR HIGHER ABOVE THE STREET SURFACE MAY BE ALLOWED AS APPROVED BY THE CITY ARBORIST.
3. LANDSCAPING AND PLANTINGS WITHIN THE ISLAND SHALL BE MAINTAINED BY THE DEVELOPER, HOMEOWNER'S ASSOCIATION OR OTHER LEGAL ENTITY THROUGH AN ENCROACHMENT AGREEMENT WITH THE CITY OF CONCORD.

NOT TO SCALE

Concord
NORTH CAROLINA
High Performance Living

RESIDENTIAL CUL-DE-SAC LENGTH GREATER THAN 150'

3-2022

STR-112

SHEET 1 OF 1

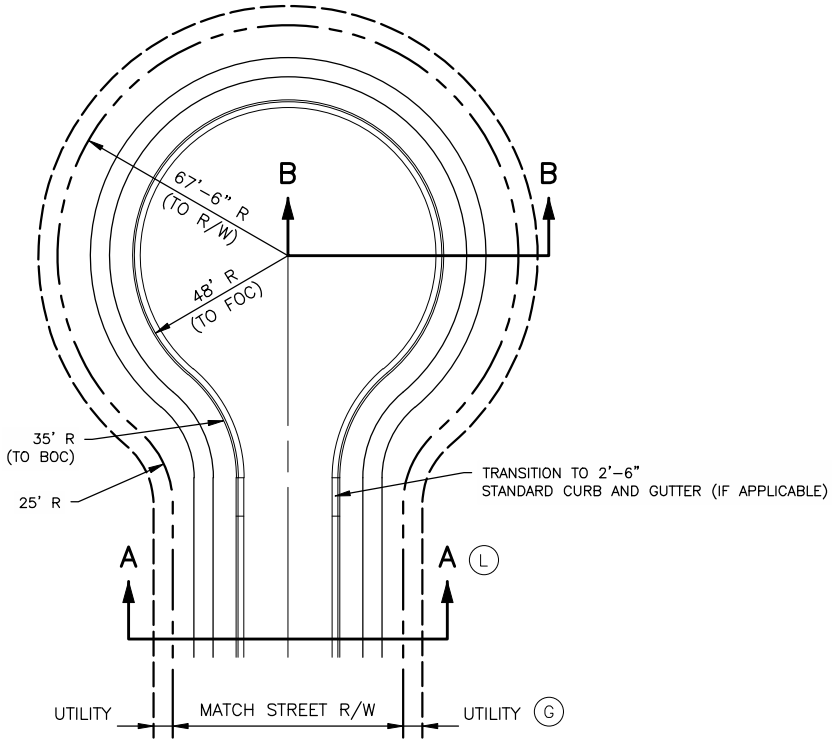

PLAN

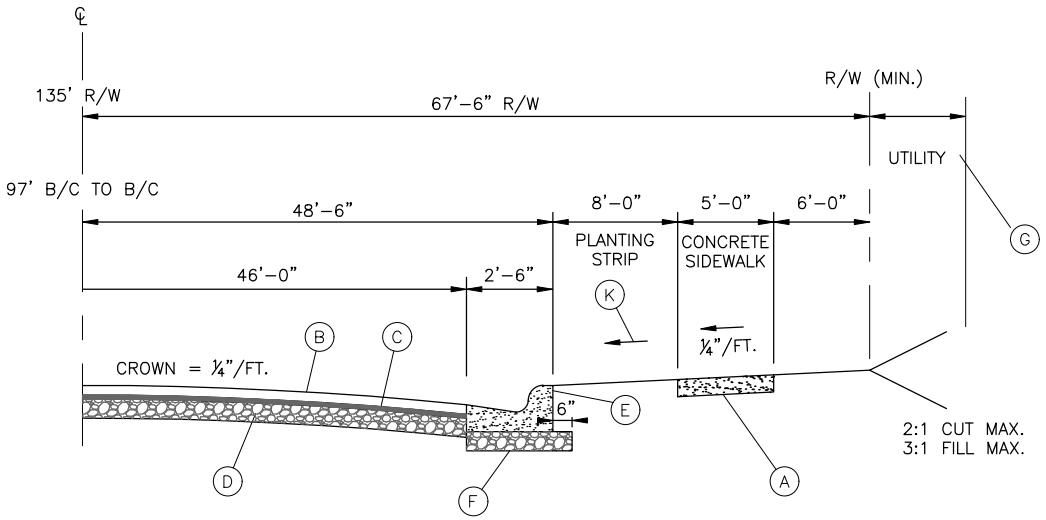

SECTION B – B

NOTES

1. THIS DETAIL APPLIES TO ALL NON-RESIDENTIAL AND MIXED USE CUL-DE-SACS OF ALL LENGTHS.

KEY

(A) 4" SIDEWALK

*DRIVEWAY APRON AND SIDEWALK AT DRIVEWAY CROSSINGS SHOULD BE 6" THICK

(B) TO MATCH TYPICAL SECTION OF ADJOINING STREET

(C) TO MATCH TYPICAL SECTION OF ADJOINING STREET

(D) TO MATCH TYPICAL SECTION OF ADJOINING STREET

(E) 2'-6" STANDARD CURB AND GUTTER

(F) 6" COMPACTED AGGREGATE BASE COURSE OR 4" B-25.0C BASE COURSE

(G) ADDITIONAL UTILITY R/W OR EASEMENT TO BE DETERMINED BY APPLICABLE PARTIES

(K) PLANTING STRIP ADJACENT TO SIDEWALK SHALL BE GRADED TO 1/4" PER FOOT (MIN.) TO 1-1/4" PER FOOT (MAX.). PRIOR APPROVAL REQUIRED FOR STEEPER GRADES

(L) SECTION A-A TO MATCH ADJOINING STREET CROSS SECTION

NOT TO SCALE

Concord NORTH CAROLINA High Performance Living

NON-RESIDENTIAL & MIXED USE CUL-DE-SAC ALL LENGTHS

3-2022

STR-113

SHEET 1 OF 1

NOTES:

1. SUBGRADE SHALL BE COMPACTED TO PUBLIC STREET STANDARDS.
2. STORM DRAINAGE (NOT SHOWN) SHALL BE PROVIDED AS NECESSARY.
3. ALLEYS SHALL BE CONSIDERED PRIVATE EASEMENTS AND WILL NOT BE ACCEPTED FOR MAINTENANCE BY THE CITY OF CONCORD.
4. DRIVEWAYS SHALL BE A MINIMUM OF 10' WIDE AND SEPARATED BY AT LEAST 6 FEET, OR GREATER IF REQUIRED BY PLANNING (LOT SIZE) REQUIREMENTS AND/OR N.C. BUILDING CODE.
5. DETAIL APPLIES TO SINGLE- OR DOUBLE-LOADED ALLEYS. FOR SINGLE-LOADED ALLEYS, THERE SHALL BE A 20-FOOT CLEAR ZONE FREE OF CUT SLOPES, OBSTRUCTIONS, HEDGES, ETC. FROM THE LOADED SIDE EDGE OF PAVEMENT.
6. MINIMUM 20' WIDE PAVEMENT REQUIRED IF ALLEY IS TO BE CONSIDERED A "FIRE APPARATUS ACCESS ROAD" PER NC FIRE CODE. FIRE CODE MAY REQUIRE OTHER DIMENSIONAL AND PAVEMENT SECTION CHANGES TO ACCOMMODATE MINIMUM REQUIREMENTS.

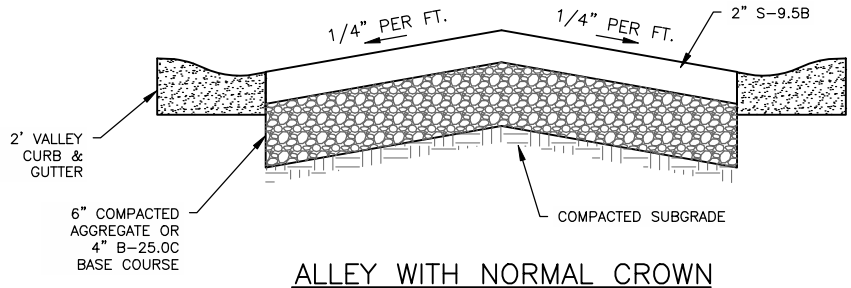

ALLEY WITH NORMAL CROWN

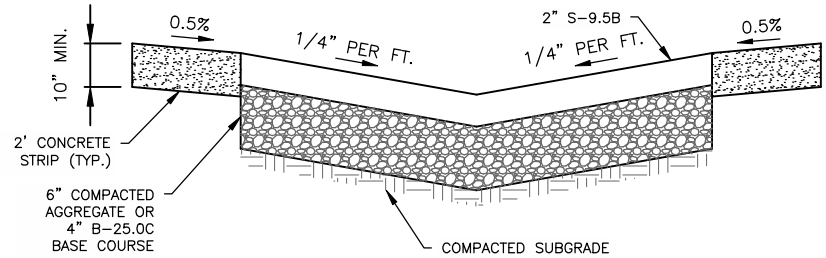

ALLEY WITH INVERSE CROWN

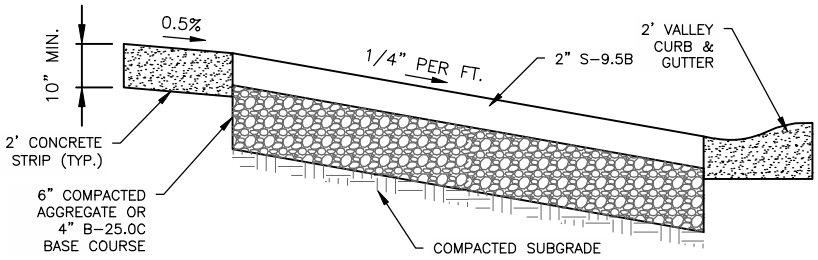

ALLEY WITH NO CROWN

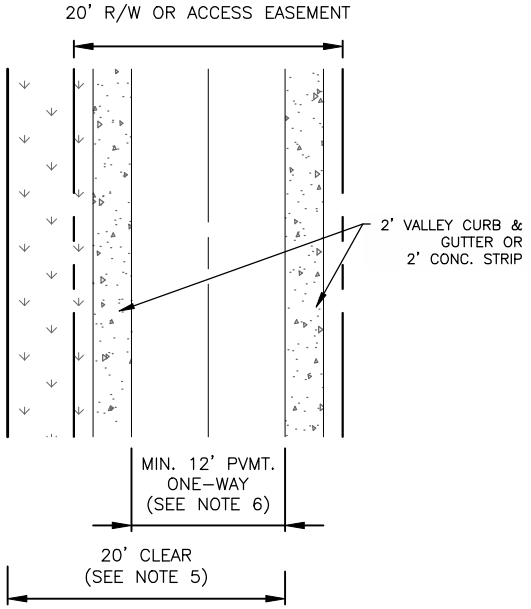

ONE-WAY PLAN

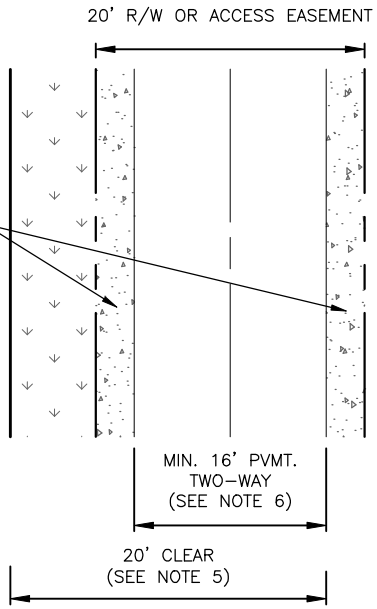

TWO-WAY PLAN

NOT TO SCALE

Concord NORTH CAROLINA High Performance Living

RESIDENTIAL ALLEYS

3-2022

STR-114

SHEET 1 OF 1

GENERAL NOTES:

1. STREETS A1 AND B1 REPRESENT THE HIGHER CLASSIFICATION WHILE STREETS A2 AND B2 REPRESENT THE LOWER CLASSIFICATION AFTER THE TRANSITION.
2. ALL TAPERS ARE 20:1 AND OCCUR ON BOTH SIDES OF THE ROAD TO BE TAPERED STARTING AT THE RADIUS RETURN AFTER THE INTERSECTION.
3. CENTERLINE OF BOTH STREETS ARE MAINTAINED. NO SHIFTING OF THE CENTERLINE SHALL OCCUR.
4. CURB TRANSITION TO OCCUR AT THE BACK OF CURB WHERE APPLICABLE.
5. RIGHT OF WAY AND SIDEWALK BEHIND TAPERED STREET SECTION TO TAPER OVER THE SAME LENGTH.
6. DETAIL APPLIES FOR TRANSITIONS FROM ONE CLASSIFICATION TO THE NEXT LOWEST. OTHER SITUATIONS WILL BE REVIEWED ON A CASE BY CASE BASIS.
7. NO DRIVEWAYS OR PARKING SPACES MAY BE LOCATED WITHIN THE TAPER.

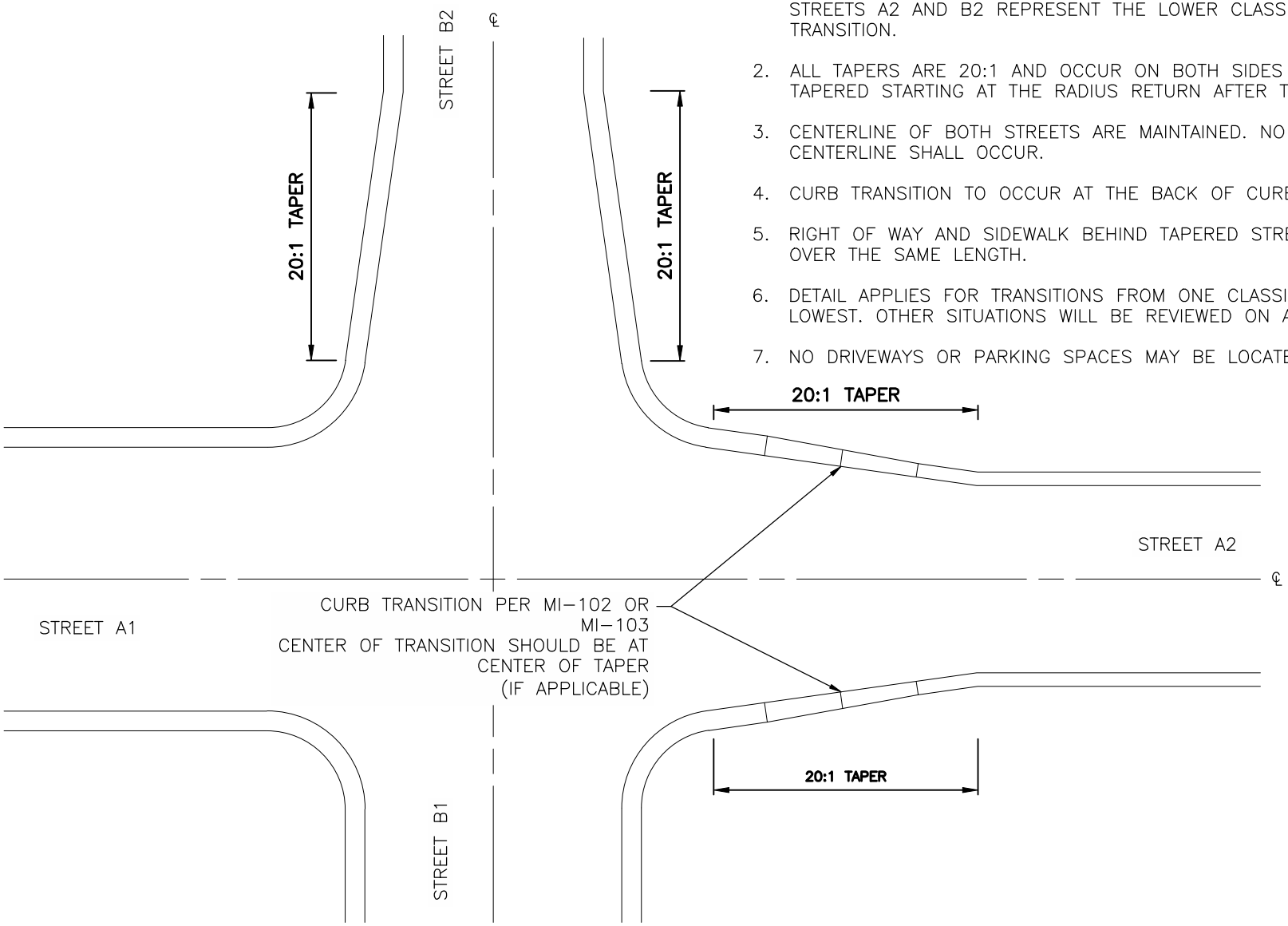

NOT TO SCALE

Concord NORTH CAROLINA High Performance Living

TRANSITION BETWEEN STREET CLASSIFICATIONS

3–2022

STR–116

SHEET 1 OF 1

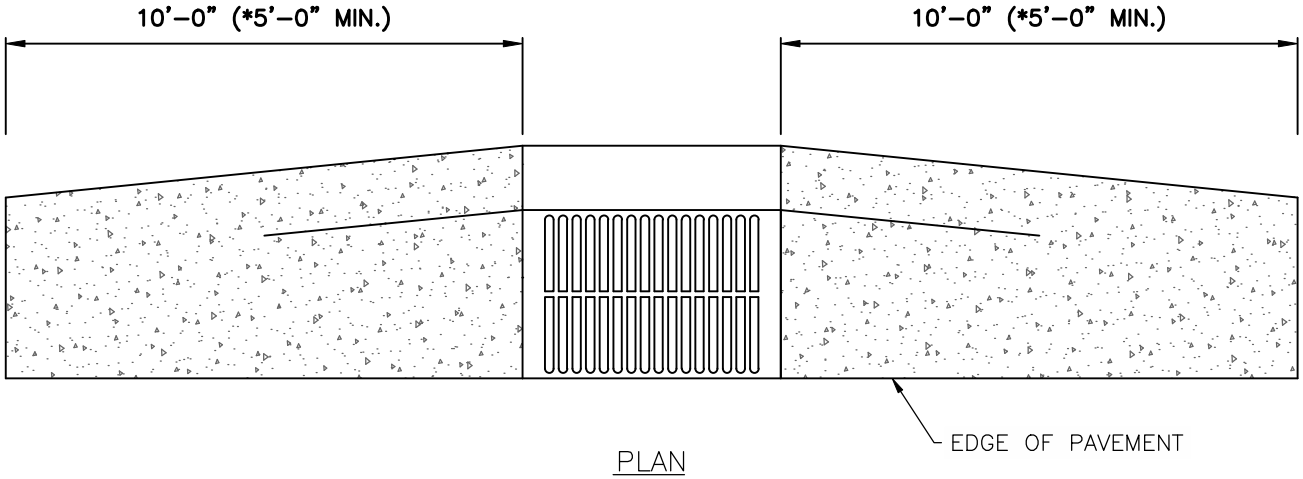

NOTE:
*5' TRANSITION APPROVED ON A CASE–BY–CASE BASIS.

SEE STANDARD MI–102 FOR CROSS SECTION GEOMETRY.

NOT TO SCALE

Concord NORTH CAROLINA High Performance Living

CATCH BASIN IN VALLEY CURB

3–2022

STR–118

SHEET 1 OF 1

(H) 2'–6" CURB AND GUTTER, STD. MI–101

(M) SAFETY RAIL, STD. MISC–206

(S) 4'–0" SIDEWALK, STD. MI–104 & MI–105

(H1) 2'–0" VALLEY GUTTER. STD. MI–101

(H2) CURB TRANSITION 2'–6" CURB AND GUTTER TO 2'–0" VALLEY GUTTER, STD. MI–102

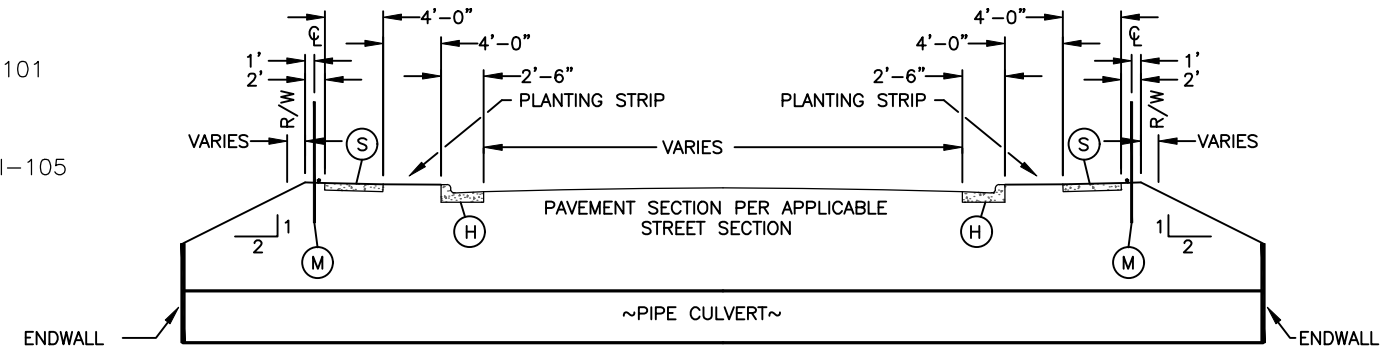

SECTION A – A

LH* = DISTANCE FROM END OF WINGWALL TO END OF SAFETY RAIL.

LC1 = DISTANCE FROM ℄ OF CULVERT TO END OF 2'–6" CURB AND GUTTER GUTTER.

LC2* = DISTANCE FROM END OF WINGWALL TO END OF 2'–6" CURB AND GUTTER.

*LH AND LC2 TO BE MEASURED FROM THE OUTSIDE OF THE NEAREST WALL OF THE CULVERT BARREL.

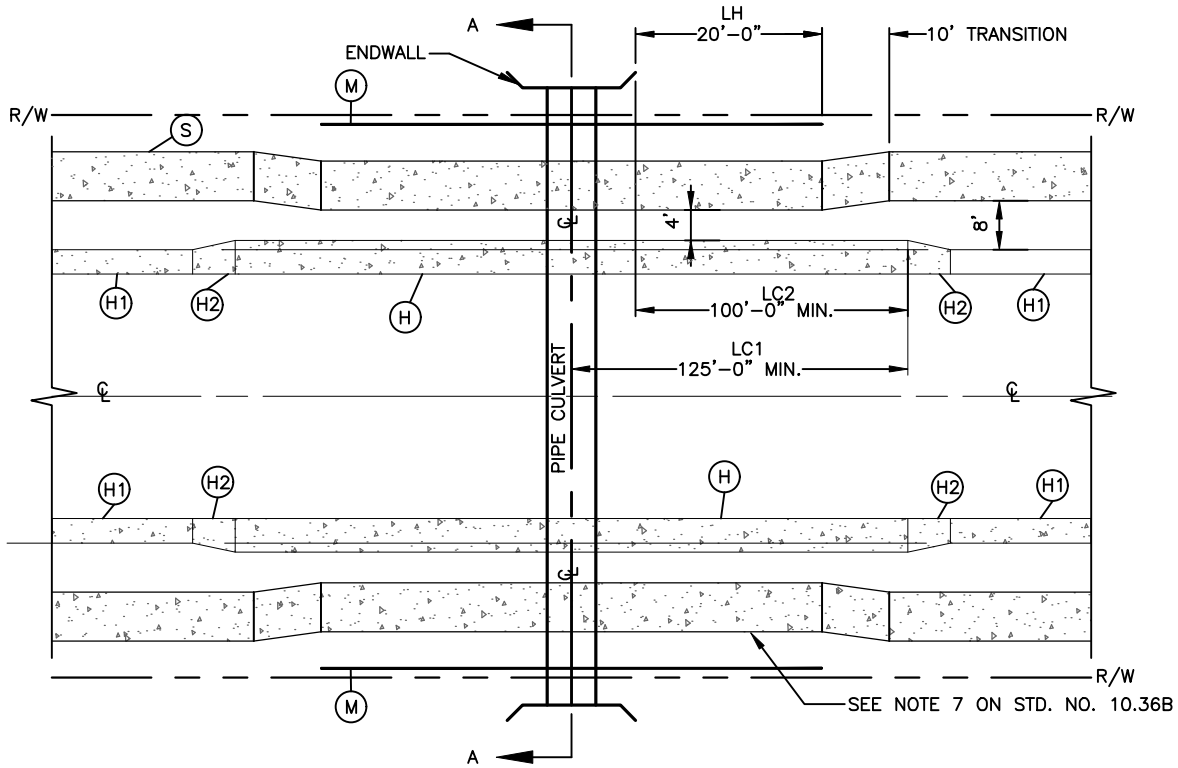

NOT TO SCALE

Concord NORTH CAROLINA High Performance Living

CULVERT CROSSING

3–2022

STR–119

SHEET 1 OF 1

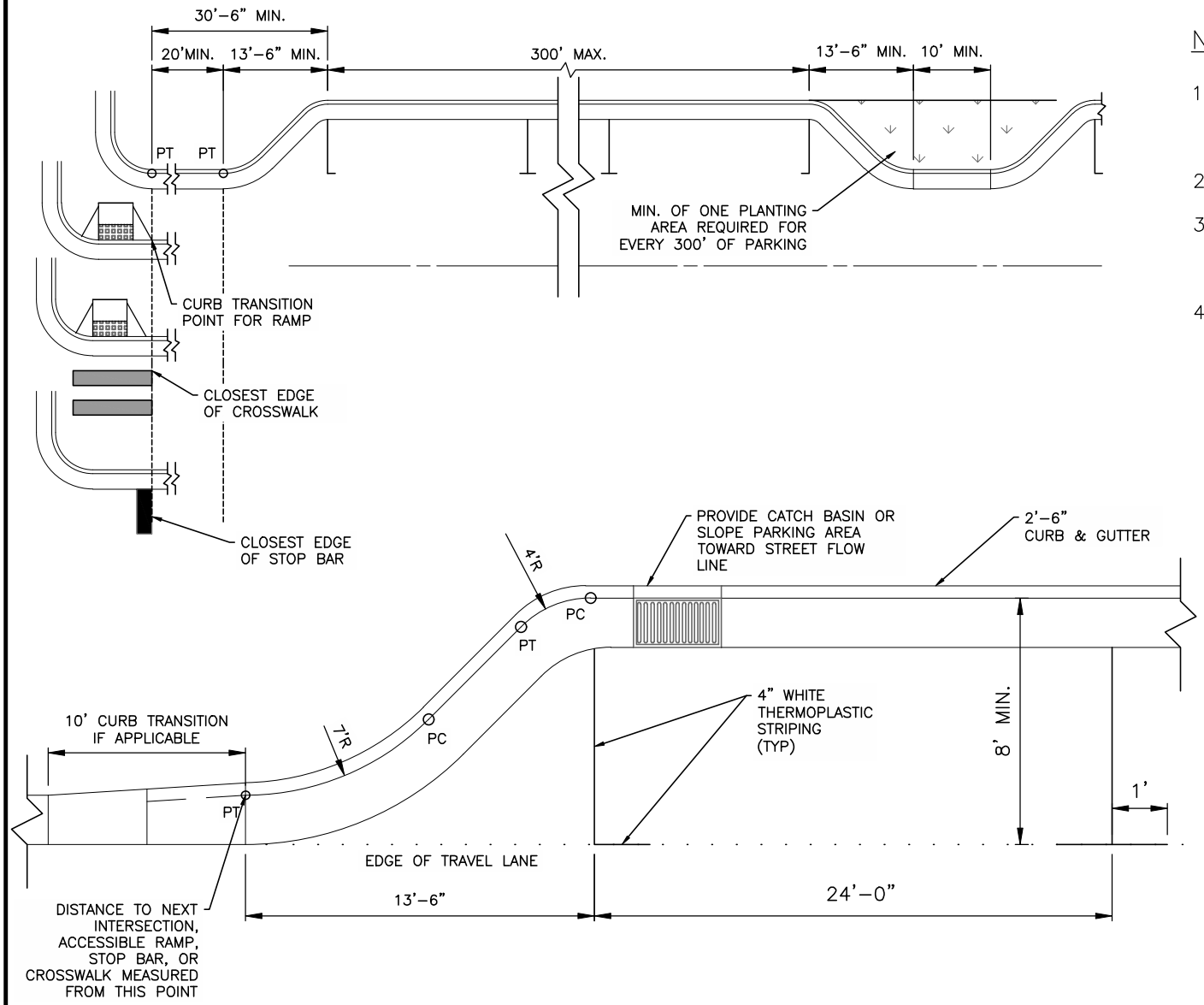

NOTES:

1. ACCESSIBLE SPACES AND ACCESS AISLES SHALL BE PROVIDED PER ADA GUIDELINES, AND PER STD. STR–121
2. ALL CONCRETE TO BE 3600 P.S.I.
3. PARKING SPACES SHALL BE GRADED TO PROPERLY DRAIN AND ENSURE WATER, SEDIMENT, DEBRIS ETC. DOES NOT COLLECT.
4. WHERE A BICYCLE LANE IS REQUIRED ADJACENT TO PARALLEL PARKING SPACES, THE MINIMUM WIDTH IS 6'.

NOT TO SCALE

Concord NORTH CAROLINA High Performance Living

ON–STREET PARALLEL PARKING

3–2022

STR–120

SHEET 1 OF 1

NOTES:

1. AN ACCESS AISLE SHALL BE PROVIDED AT STREET LEVEL FOR ON-STREET PARALLEL PARKING WITH 5' MIN. WIDTH AND SHALL EXTEND THE FULL LENGTH OF THE PARKING SPACE.
2. ACCESSIBLE SPACE AND ACCESS AISLE SHALL BE OBSTRUCTION-FREE.
3. ALL CONCRETE TO BE 3600 P.S.I.
4. GUTTER FLOW LINE SHALL BE MAINTAINED THROUGH THE ACCESS AISLE.
5. ACCESS AISLE, CURB RAMP, AND PARKING SPACE SHALL BE GRADED TO PROPERLY DRAIN AND TO ENSURE WATER, SEDIMENT, DEBRIS, ETC., DOES NOT COLLECT.
6. ACCESSIBLE PAVEMENT MARKING DETAIL PER MUTCD:
   - INSTALL INTERNATIONAL SYMBOL OF ACCESSIBILITY PARKING SPACE MARKINGS, INCLUDING WHITE SYMBOL WITH BLUE BACKGROUND AND WHITE BORDER. SYMBOL SHALL HAVE MIN. HEIGHT OF 28 INCHES AND MIN. WIDTH OF 24 INCHES (EXCLUSIVE OF BLUE BACKGROUND AND WHITE BORDER). STROKE WIDTH SHALL BE MIN. 3 INCHES.
   - WHITE PAVEMENT MARKINGS PLACED ON CONCRETE SHALL BE SHADOWED WITH BLACK BORDER.
   - TYPICAL SYMBOL LOCATION AND ORIENTATION PER "DIAGRAM A" BELOW
8. LOCATE IN MOST LEVEL AREA OF BLOCK (RECOMMENDED PRACTICE) TO MAXIMIZE USABILITY.
9. SPACE AND ACCESS AISLE SHOULD HAVE SMOOTH SURFACE FOR LIFT DEPLOYMENT. MINIMIZE CROSS SLOPE FOR LIFT OPERATION.
10. FOR MORE INFORMATION SEE SECTION R309 OF "PROPOSED GUIDELINES FOR PEDESTRIAN FACILITIES IN THE PUBLIC RIGHT-OF-WAY" (PROWAG).
11. USE APPROPRIATE SIGNAGE AS SHOWN ON STD. DRV-120 FOR ON-STREET PARKING.

ON-STREET PARKING SPACES REQUIRED	
TOTAL PARKING SPACES PROVIDED	MINIMUM NUMBER OF ACCESSIBLE SPACES REQUIRED
1 TO 25	1
26 TO 50	2
51 TO 75	3
76 TO 100	4
101 TO 150	5
151 TO 200	6
201 AND OVER	4% OF TOTAL
(BASED ON TABLE R214 OF PROWAG)	

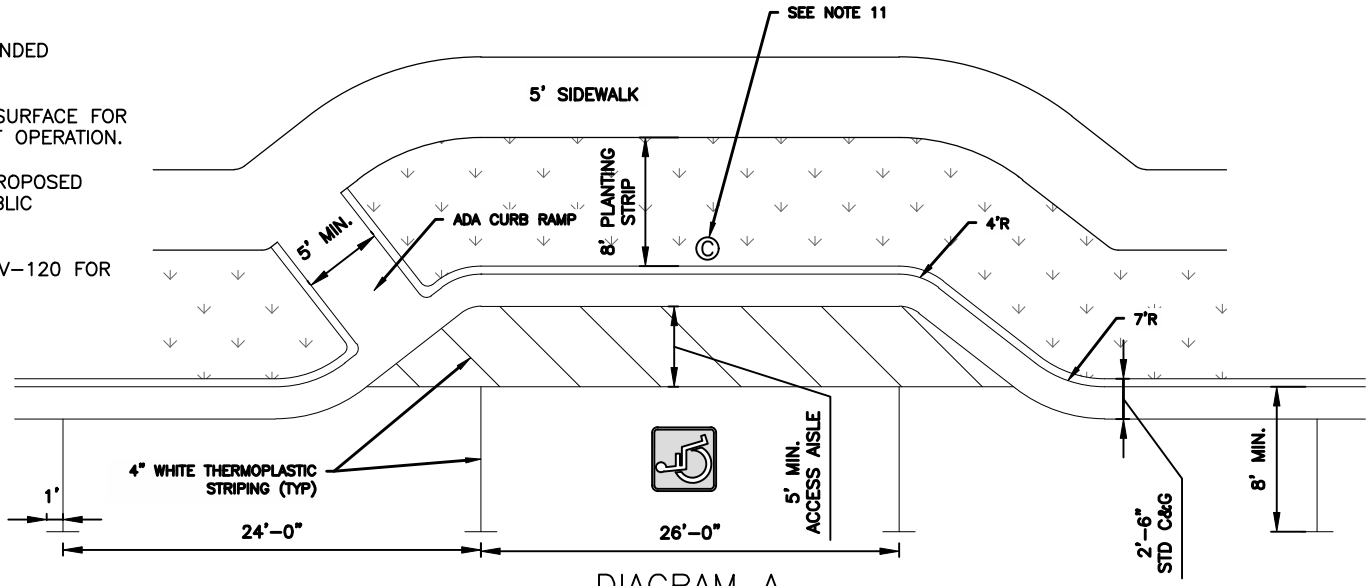

DIAGRAM A

NOT TO SCALE

Concord NORTH CAROLINA High Performance Living

ACCESSIBLE ON-STREET PARALLEL PARKING

3-2022

STR-121

SHEET 1 OF 1

NOTES:

1. ACCESSIBLE SPACES AND ACCESS AISLES SHALL BE PROVIDED PROVIDED PER ADA GUIDELINES. VAN ACCESSIBLE SPACES SHALL HAVE AN ACCESS AISLE WITH A MINIMUM WIDTH OF 8' LOCATED ON THE PASSENGER SIDE. NON-VAN ACCESS AISLES SHALL BE A MINIMUM OF 5' IN WIDTH.
2. ACCESSIBLE SPACE AND ACCESS AISLE SHALL BE OBSTRUCTION-FREE.
3. APPROPRIATE CURB RAMPS TO BE LOCATED AT EACH ACCESS AISLE.
4. ALL CONCRETE TO BE 3600 P.S.I.
5. ACCESSIBLE PAVEMENT MARKING DETAIL:
   - INSTALL INTERNATIONAL SYMBOL OF ACCESSIBILITY PARKING SPACE MARKINGS, INCLUDING WHITE SYMBOL WITH BLUE BACKGROUND AND WHITE BORDER. SYMBOL SHALL HAVE MIN. HEIGHT OF 28 INCHES AND MIN. WIDTH OF 24 INCHES (EXCLUSIVE OF BLUE BACKGROUND AND WHITE BORDER). STROKE WIDTH SHALL BE MIN. 3 INCHES.
   - WHITE PAVEMENT MARKINGS PLACED ON CONCRETE SHALL BE SHADOWED WITH BLACK BORDER.
   - TYPICAL SYMBOL LOCATION AND ORIENTATION PER "DIAGRAM A" BELOW
8. USE APPROPRIATE SIGNS AS SHOWN ON STD. DRV-120 FOR ACCESSIBLE ON-STREET PARKING.

PREFFERED DIMENSIONS FOR REVERSE ANGLE PARKING				
ANGLE (A)	STALL LENGTH (L)	STALL WIDTH (W)	STALL DEPTH (H)	PARALLEL WIDTH (C)
30°	32'	19	16'	9.5'
45°	25.46'	13.44'	18'	9.5'
60°	21.36	10.97	18.5'	9.5'

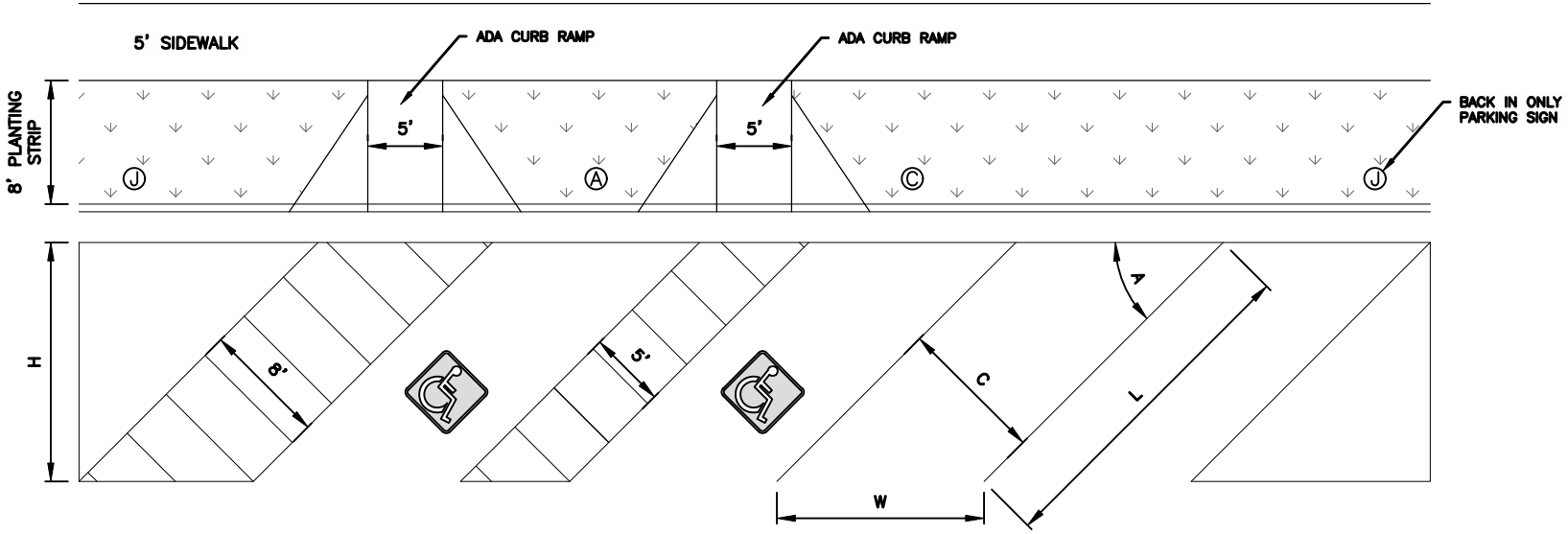

DIAGRAM A

NOT TO SCALE

Concord NORTH CAROLINA High Performance Living

ON-STREET REVERSE ANGLE PARKING

3-2022

STR-122

SHEET 1 OF 1

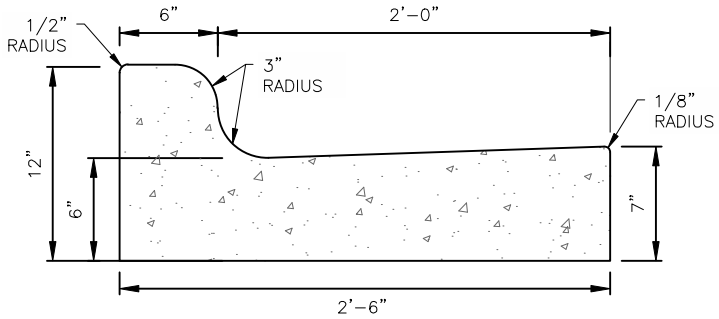

STANDARD 2'-6" CURB & GUTTER

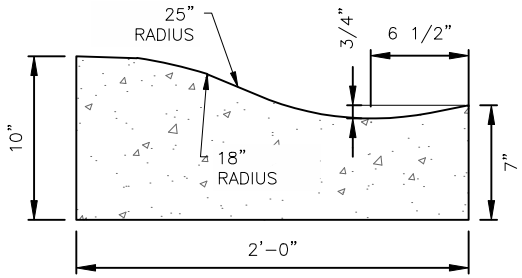

2'-0" VALLEY CURB & GUTTER

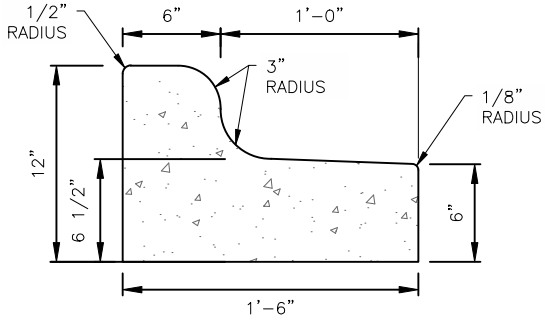

1'-6" MEDIAN CURB & GUTTER

TO BE USED IN MEDIANS WHEN LANES ARE SLOPED FROM ISLAND OR AS SPECIFIED BY THE APPROPRIATE CITY ENGINEERING DEPT.

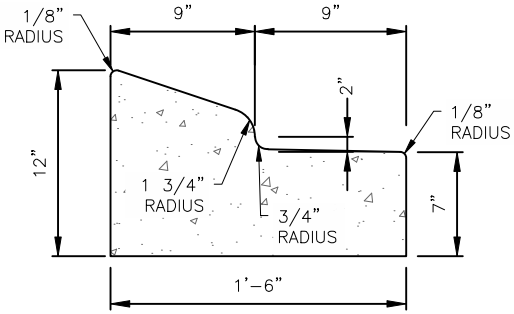

1'-6" MOUNTABLE CURB & GUTTER

TO BE USED IN MEDIANS ONLY: WHEN SPECIFIED BY THE APPROPRIATE CITY DEPT.

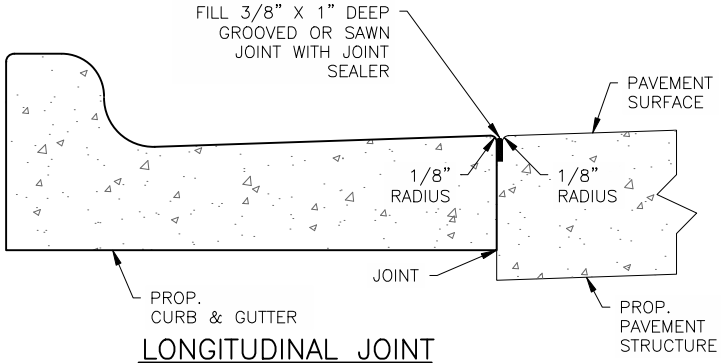

LONGITUDINAL JOINT

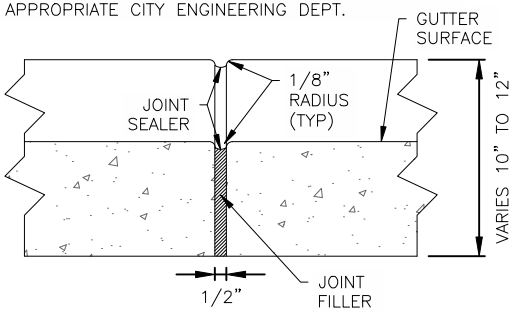

TRANSVERSE EXPANSION JOINT

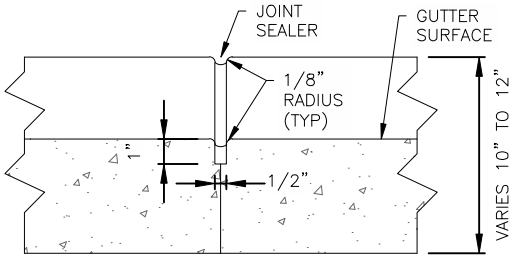

CONTRACTION JOINT

NOTES

1. NCDOT STANDARD DETAIL 846.01 TO BE USED FOR VARIOUS CURB AND GUTTER SUPERELEVATION RATES.
2. PLACE CONTRACTION JOINTS AT 10' INTERVALS. JOINT SPACING MAY BE ALTERED BY CITY ENGINEER TO PREVENT UNCONTROLLED CRACKING.
3. FILL ALL CONSTRUCTION JOINTS WITH JOINT FILLER AND SEALER.
4. SPACE EXPANSION JOINTS AT 90' INTERVALS AND ADJACENT TO ALL RIGID OBJECTS. JOINTS SHALL MATCH LOCATION WITH JOINTS IN ABUTTING SIDEWALK.
5. CONCRETE COMPRESSIVE STRENGTH SHALL BE 3600 P.S.I. IN 28 DAYS.
6. TOP 6" OF SUBGRADE BENEATH CURB AND GUTTER SHALL BE COMPACTED TO 100% STANDARD PROCTOR DENSITY.

NOT TO SCALE

Concord NORTH CAROLINA High Performance Living

CONCRETE CURB & GUTTER DETAILS

3-2022

MI-101

SHEET 1 OF 1

L = 10 FEET IN LONGITUDINAL SECTION

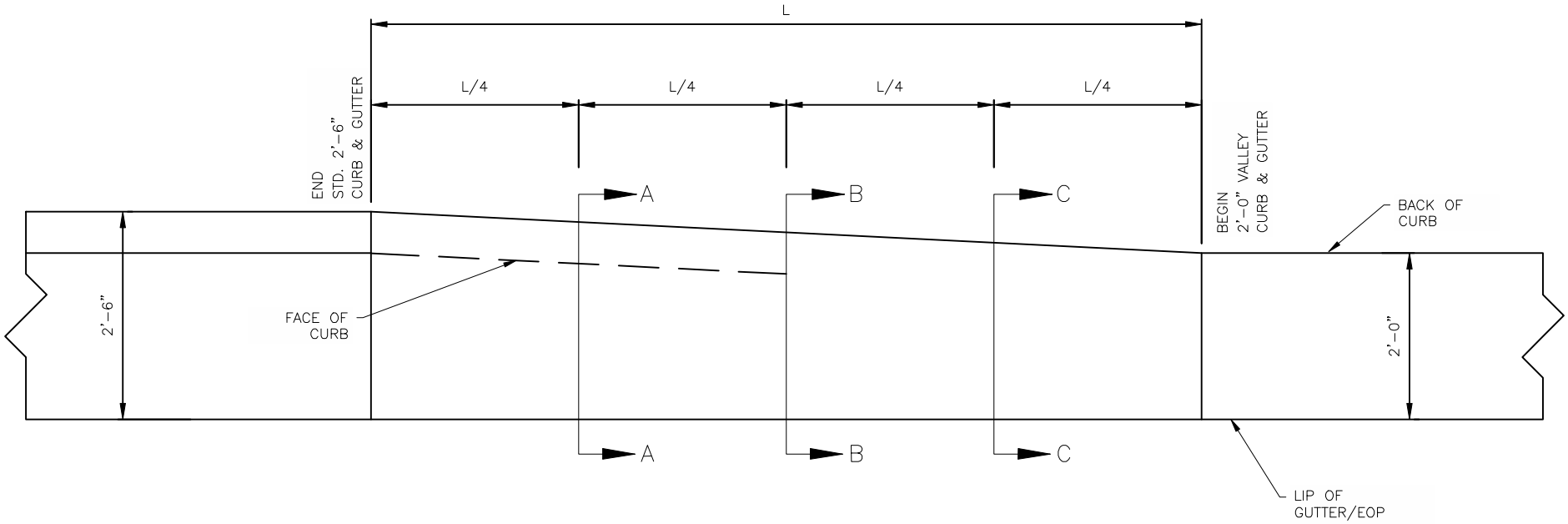

PLAN VIEW

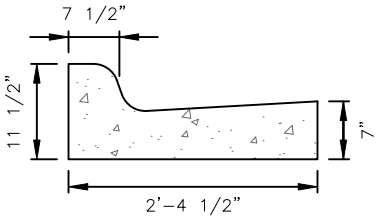

SECTION A–A

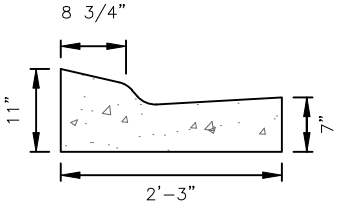

SECTION B–B

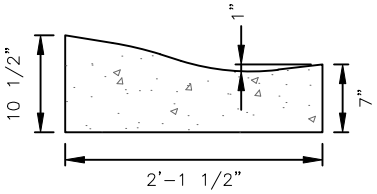

SECTION C–C

NOTES

1. TRANSITION SHALL NOT BE LOCATED WITHIN THE CURB RADIUS.
2. TRASNITION TO BE ALONG BACK OF CURB.

NOT TO SCALE

Concord
NORTH CAROLINA
High Performance Living

CURB TRANSITION
2'–6" STANDARD TO 2'–0" VALLEY

3–2022

MI–102

SHEET 1 OF 1

L = 10 FEET IN LONGITUDINAL SECTION

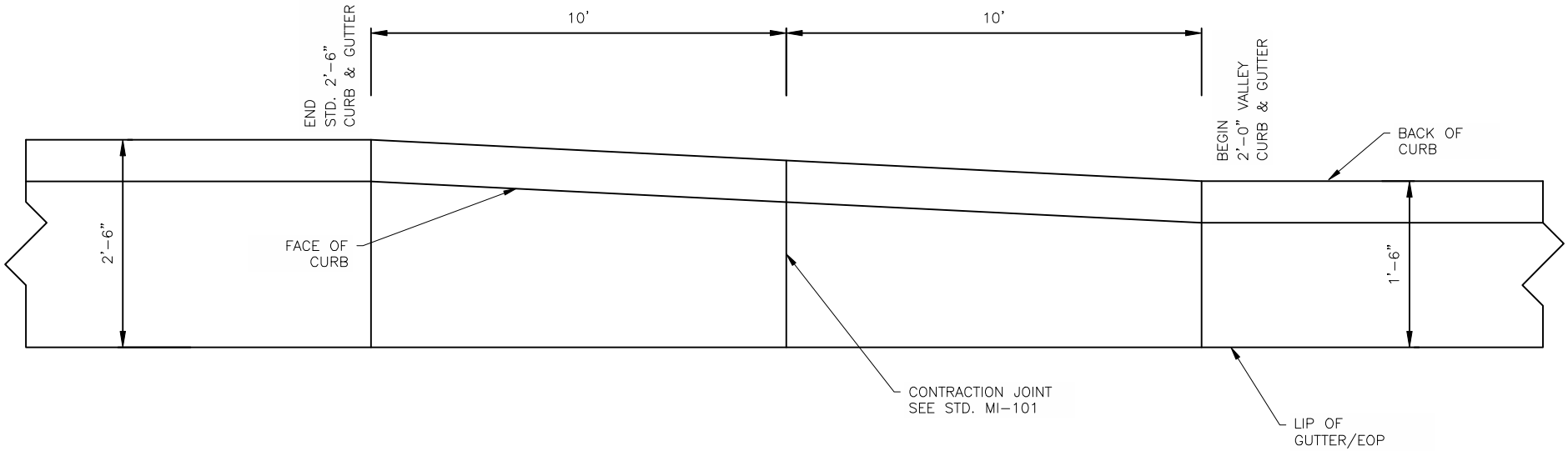

PLAN VIEW

NOTES

1. TRANSITION SHALL NOT BE LOCATED WITHIN THE CURB RADIUS.
2. TRASNITION TO BE ALONG BACK OF CURB.

NOT TO SCALE

Concord
NORTH CAROLINA
High Performance Living

CURB TRANSITION
2'-6" STANDARD TO 1'-6" STANDARD

3-2022

MI-103

SHEET 1 OF 1

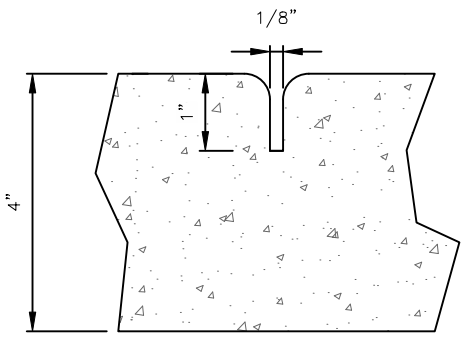

GROOVE JOINT IN SIDEWALK

GENERAL NOTES:

1. A GROOVE JOINT 1" DEEP WITH 1/8" RADII SHALL BE REQUIRED IN THE CONCRETE SIDEWALK AT 5' INTERVALS. ONE 1/2" EXPANSION JOINT WILL BE REQUIRED AT INTERVALS OF NOT MORE THAN 45' AND MATCHING EXPANSION/CONSTRUCTION JOINT IN ADJACENT CURB. A SEALED 1/2" EXPANSION JOINT WILL BE REQUIRED WHERE THE SIDEWALK JOINS ANY RIGID STRUCTURE.
2. SIDEWALK AT DRIVEWAY CORSSINGS TO BE 6" THICK.
3. MINIMUM WIDTH OF SIDEWALK IS 5'
4. CONCRETE COMPRESSIVE STRENGTH SHALL BE 3600 PSI. IN 28 DAYS.
5. ZONING CONDITIONS MAY REQUIRE ADDITIONAL WIDTH SIDEWALKS WHICH SHALL SUPERSEDE THESE STANDARD DIMENSIONS SHOWN.
6. LIDS FOR JUNCTION BOXES AND UTILITY VAULTS SHALL BE NON-SKID AS SPECIFIED BY ENGINEER.
7. JOINT MATERIALS SHALL LIMIT SHRINK/SWELL SO POST CONSTRUCTION INSTALLATION RESULTS IN A MAXIMUM OF 1/4" FROM FLUSH.

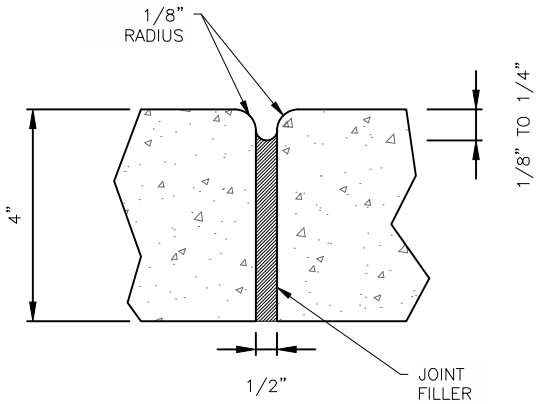

TRANSVERSE EXPANSION JOINT IN SIDEWALK

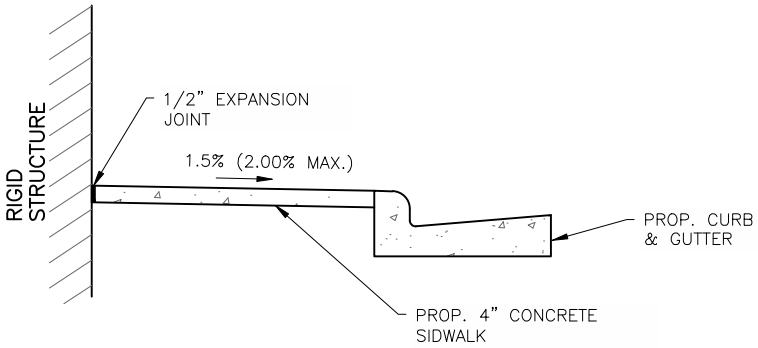

DETAILS SHOWING EXPANSION JOINTS IN CONCRETE SIDEWALK

NOT TO SCALE

Concord
NORTH CAROLINA
High Performance Living

CONCRETE SIDEWALKS

3-2022

MI-104

SHEET 1 OF 1

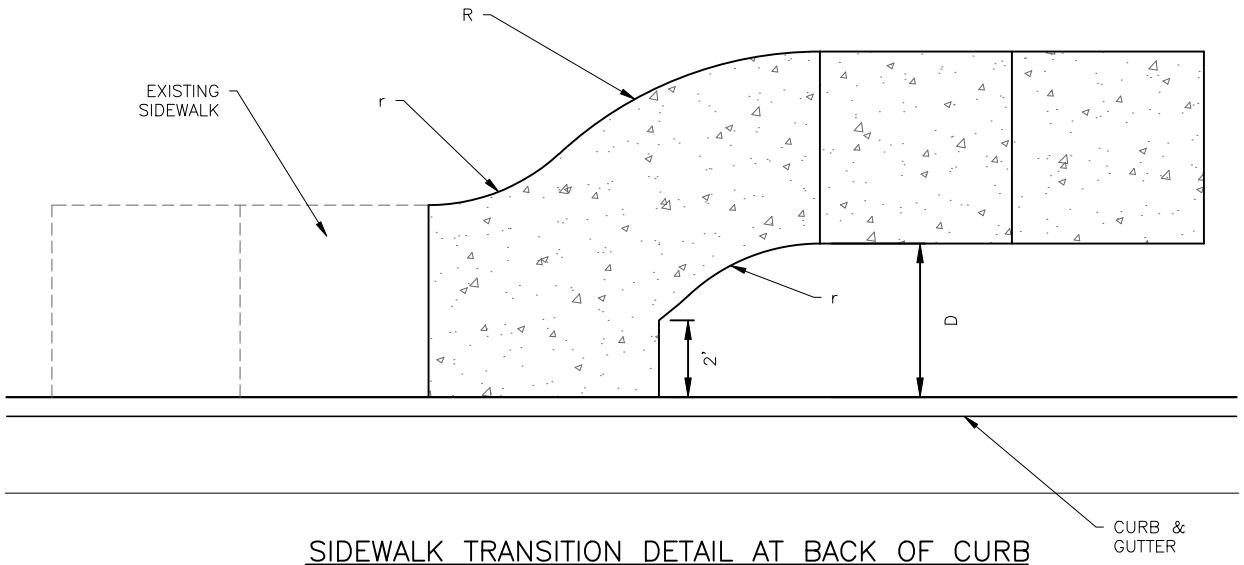

SIDEWALK TRANSITION DETAIL AT BACK OF CURB

KEY		
D	R	r
0'-2.9'	10'-0"	4'-0"
3'-7.9'	25'-0"	19'-0"
8'+	50'-0"	44'-0"

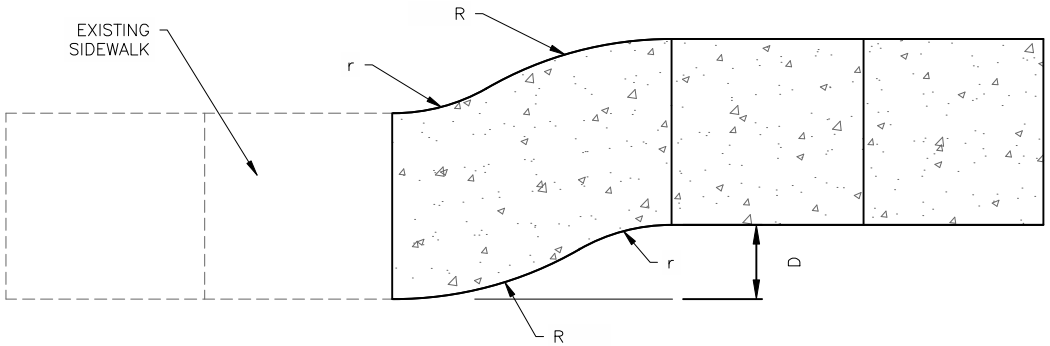

SIDEWALK TRANSITION DETAIL (PLANTING STRIP BOTH SIDES)

NOT TO SCALE

Concord NORTH CAROLINA High Performance Living

SIDEWALK TRANSITION

3-2022

MI-105

SHEET 1 OF 1

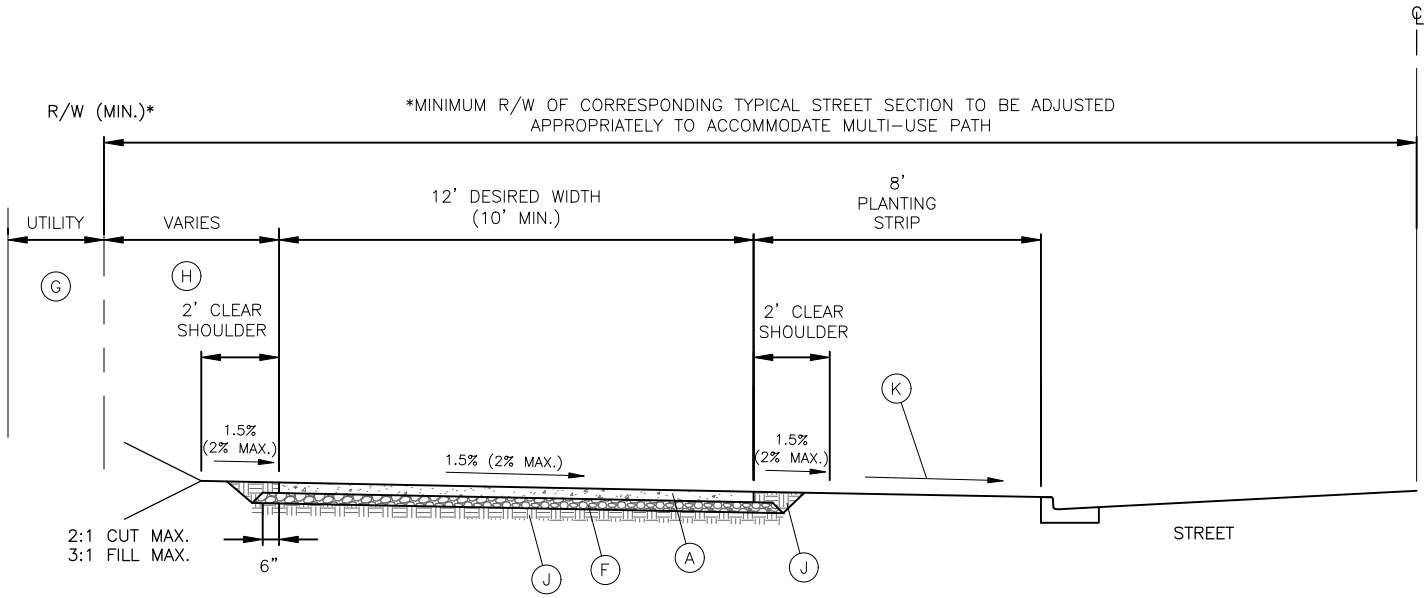

NOTES:

1. AT INTERSECTIONS WITH STREETS OR DRIVEWAYS, RAMP WIDTH MUST MATCH MULTI-USE PATH WIDTH.
2. ALL JOINTS MUST BE SEALED. SEAL MUST BE NON-SHRINKING AND FLUSH WITH FINISHED GRADE OF THE CONCRETE PATH.
3. ALL CONCRETE SHALL BE AT LEAST 3600 PSI COMPRESSIVE STRENGTH.
4. JOINTS MUST BE SAWCUT A MINIMUM OF 1/4 DEPTH OF CONCRETE DEPTH, BUT NO MORE THAN 1/2 OF CONCRETE DEPTH.
   - TRANSVERSE JOINTS MUST BE SAWCUT EVERY 6 FEET.
   - CONSTRUCTION JOINTS MUST BE EVERY 40 FEET.
5. NO ABOVE GROUND UTILITIES OR UTILITY SURFACE COVERS/PLATES/MANHOLES SHALL BE LOCATED WITHIN MULTI-USE-PATH AND SHALL BE A MINIMUM OF 2 FEET FROM THE EDGE OF THE PATH. RAISED MANHOLES SHALL BE LOCATED A MINIMUM OF 4' FROM EDGE OF PATH.
6. SIGN POSTS OR OTHER FIXED OBJECTS SHALL BE LOCATED A MINIMUM OF 2' FROM EDGE OF PATH.

KEY

- (A) 6" CONCRETE, 3600 PSI
- (F) 3" COMPACTED AGGREGATE BASE COURSE
- (G) ADDITIONAL UTILITY R/W OR EASEMENT TO BE DETERMINED BY APPLICABLE PARTIES
- (H) WIDTH TO BE DETERMINED BY TYPICAL SECTION OF STREET CLASSIFICATION
- (J) SUBGRADE COMPACTED TO A DENSITY NO LESS THAN 95%
- (K) PLANTING STRIP ADJACENT TO MULTI-USE PATH SHALL BE GRADED TO 1/4" PER FOOT (MIN.) TO 1-1/4" PER FOOT (MAX.). PRIOR APPROVAL REQUIRED FOR STEEPER GRADES.

NOT TO SCALE

Concord NORTH CAROLINA High Performance Living

CONCRETE MULTI-USE PATH

3-2022

MI-106

SHEET 1 OF 1

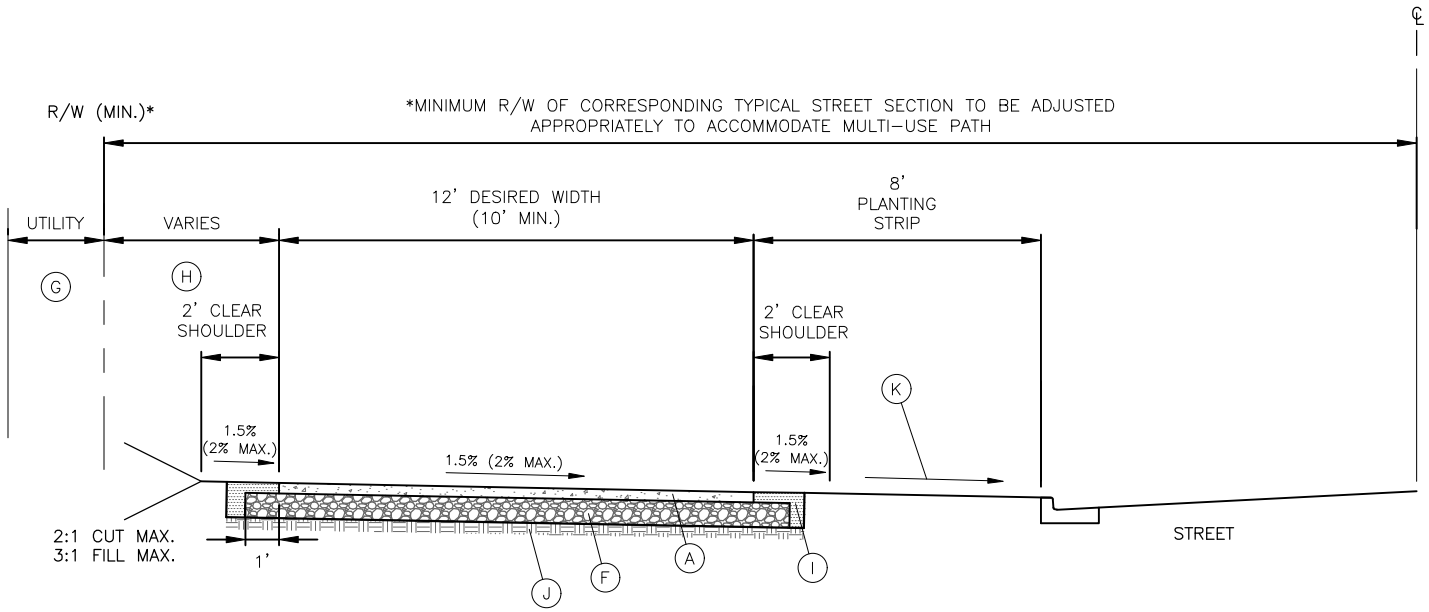

NOTES:

1. AT INTERSECTIONS WITH STREETS OR DRIVEWAYS, RAMP WIDTH MUST MATCH MULTI-USE PATH WIDTH.
2. NO ABOVE GROUND UTILITIES OR UTILITY SURFACE COVERS/PLATES/MANHOLES SHALL BE LOCATED WITHIN MULTI-USE-PATH AND SHALL BE A MINIMUM OF 2 FEET FROM THE EDGE OF THE PATH. RAISED MANHOLES SHALL BE LOCATED A MINIMUM OF 4' FROM EDGE OF PATH.
3. SIGN POSTS OR OTHER FIXED OBJECTS SHALL BE LOCATED A MINIMUM OF 2' FROM EDGE OF PATH.

GEOTEXTILE FABRIC SPECIFICATIONS		
	TYPICAL	TEST
TENSILE STRENGTH	200	ASTM D4632-86
ELONGATION AT Break, %	15	ASTM D4632
PUNCTURE STENGTH, LBS.	100	ASTM D0751
MULLEN BURST, PSI	400	ASTM D0751/3786
TRAPEZOID TEAR, LBS.	75	ASTM D4533

KEY

- (A) 2" ASPHALT CONCRETE S9.5B
- (F) 6" COMPACTED AGGREGATE BASE COURSE UNDERLINED WITH GEOTEXTILE FABRIC (SEE TABLE)
- (G) ADDITIONAL UTILITY R/W OR EASEMENT TO BE DETERMINED BY APPLICABLE PARTIES
- (H) WIDTH TO BE DETERMINED BY TYPICAL SECTION OF STREET CLASSIFICATION
- (I) CLEAN BACKFILL
- (J) SUBGRADE COMPACTED TO A DENSITY OF 100%
- (K) PLANTING STRIP ADJACENT TO MULTI-USE PATH SHALL BE GRADED TO 1/4" PER FOOT (MIN.) TO 1-1/4" PER FOOT (MAX.). PRIOR APPROVAL REQUIRED FOR STEEPER GRADES.

NOT TO SCALE

Concord NORTH CAROLINA High Performance Living

ASPHALT MULTI-USE PATH

3-2022

MI-107

SHEET 1 OF 1

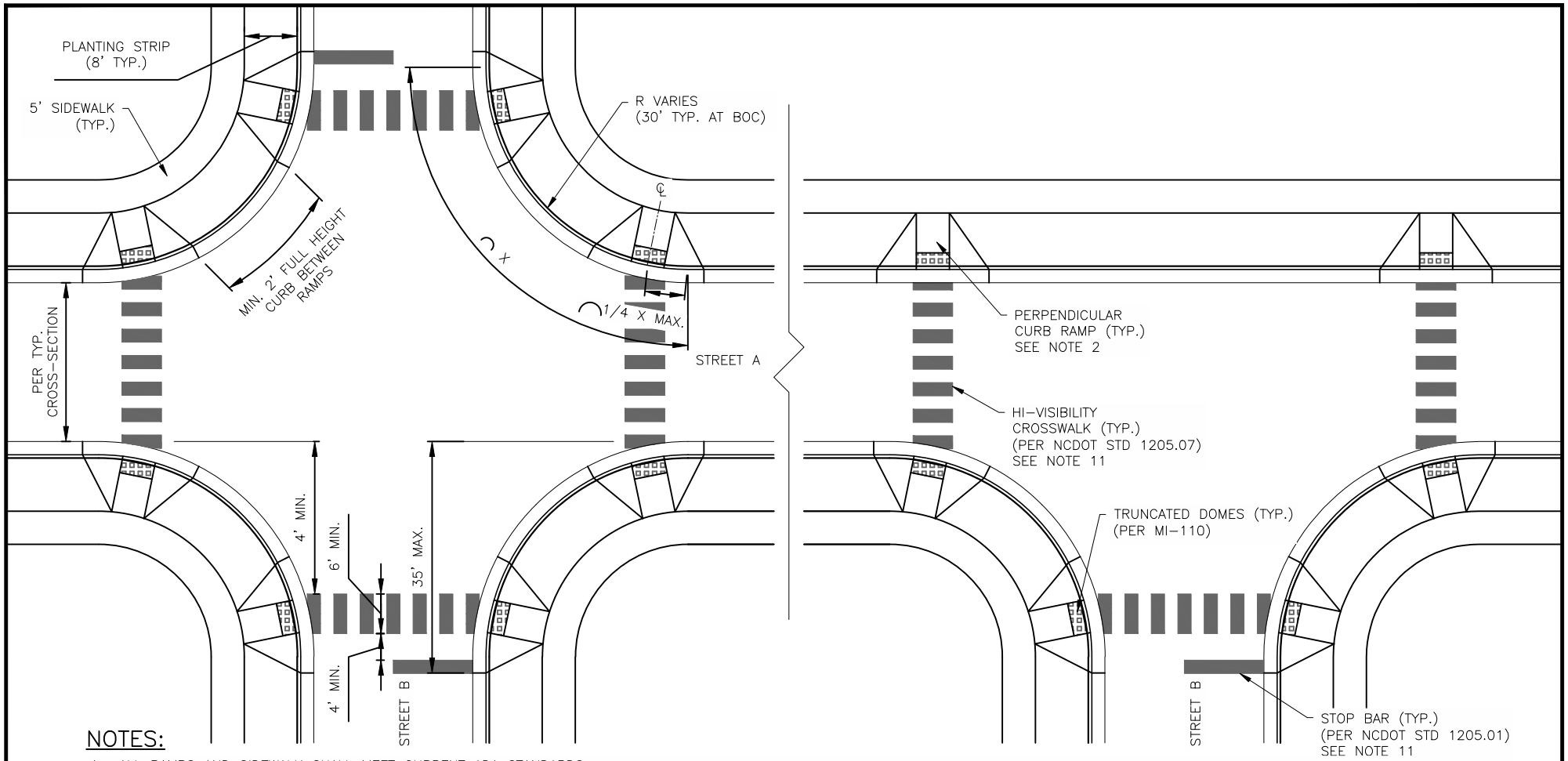

NOTES:

1. ALL RAMPS AND SIDEWALK SHALL MEET CURRENT ADA STANDARDS.
2. PERPENDICULAR CURB RAMPS PER DETAILS MI-111 AND MI-112 ARE STANDARD, OTHER TYPES WILL BE CONSIDERED ON A CASE BY CASE BASIS.
3. DUAL RAMPS AT EACH CORNER ARE STANDARD. SINGLE DIAGONAL RAMPS MAY BE CONSIDERED ONLY IN UNUSUAL CIRCUMSTANCES OR RETROFIT SITUATIONS AND MUST MEET ADA STANDARDS.
4. CURB RAMP AND CROSSWALK LOCATIONS AND TYPES AT INTERSECTIONS WITH NCDOT STREETS ARE SUBJECT TO REVIEW AND APPROVAL BY NCDOT.
5. FOR ALL RAMPS AT MARKED CROSSWALKS, THE RAMP OPENING (AT THE FULLY DEPRESSED CURB) SHALL BE LOCATED WITHIN THE PARALLEL BOUNDARIES OF CROSSWALK MARKINGS.
6. DRAINAGE STRUCTURES, MAST ARMS, LIGHT POLES AND OTHER OBSTRUCTIONS SHALL NOT BE PLACED IN LINE WITH RAMPS. LOCATION OF THE RAMP SHALL TAKE PRECEDENCE OVER LOCATION OF OBSTRUCTIONS EXCEPT WHERE EXISTING OBSTRUCTIONS ARE BEING UTILIZED IN THE NEW CONSTRUCTION.
7. NO UTILITY STRUCTURES MAY BE LOCATED WITHIN THE RAMP AREA.
8. NO PORTION OF A CURB RAMP MAY BE CONTAINED WITHIN A DRIVEWAY, NOR MAY A DRIVEWAY SERVE AS A CURB RAMP.
9. CATCH BASINS MUST BE PLACED APPROPRIATELY WITHOUT INTERFERING WITH THE CURB TRANSITIONS FOR RAMPS.
10. WING AND RAMP SURFACES SHALL BE FINISHED IN ACCORDANCE WITH THE LATEST EDITION OF NCDOT STANDARD SPECIFICATIONS FOR ROADS AND STRUCTURES.
11. CROSSWALKS AND STOP BARS SHALL BE WHITE THERMOPLASTIC 120 MILS THICK. LOCATIONS WILL BE DETERMINED ON A CASE BY CASE BASIS DURING THE PLAN REVIEW PROCESS.
12. TERMINATE PARKING A MINIMUM OF 20' FROM A PEDESTRIAN CROSSING.

NOT TO SCALE

Concord
NORTH CAROLINA
High Performance Living

TYPICAL INTERSECTION CURB RAMP LAYOUT AND NOTES

3-2022

MI-109

SHEET 1 OF 1

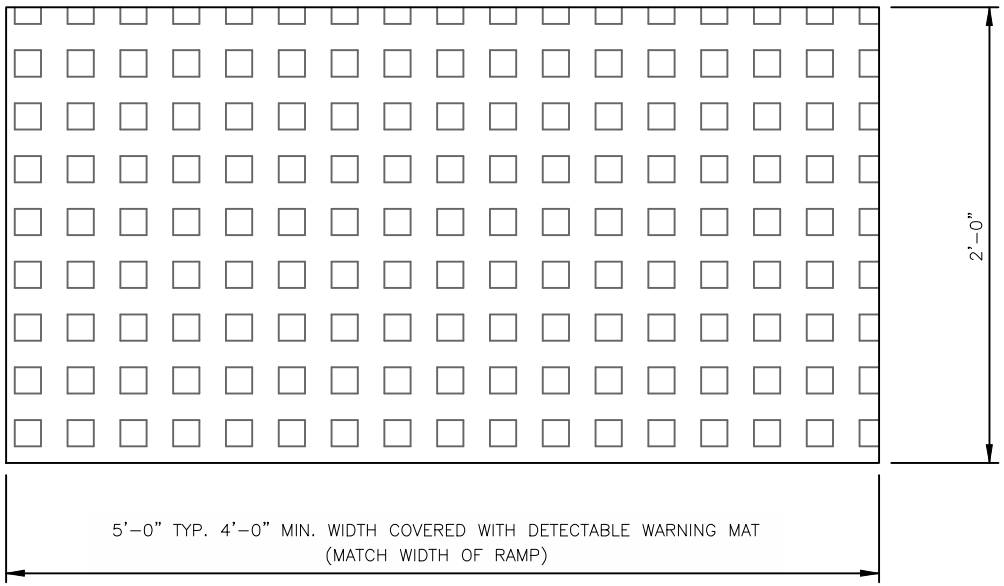

TRUNCATED DOME PLAN VIEW

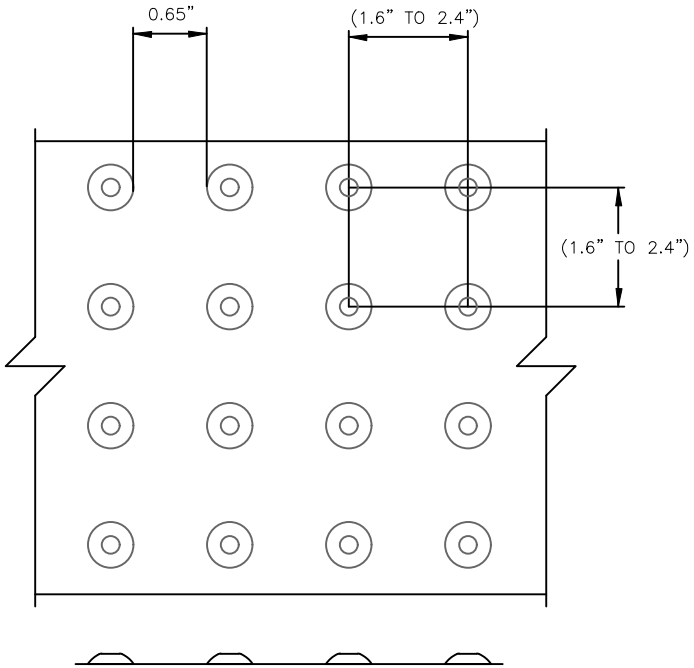

TRUNCATED DOME SPACING

NOTES:

1. ALL DETECTABLE WARNING DEVICES USED IN NEW CONSTRUCTION SHALL BE OF A RIGID PRECAST OR EMBEDDED PRODUCT APPROVED BY THE CITY ENGINEER. RETROFIT MATS WILL ONLY BE ALLOWED ON EXISTING RAMPS WITH PRIOR APPROVAL OF THE CITY ENGINEER FOR MATERIAL TYPE AND INSTALLATION (IE. RESURFACING).
2. RAMP AND DETECTABLE WARNING AREA SHALL BE A MINIMUM OF 4 FEET IN WIDTH, BUT NOT LESS THAN THE WIDTH OF SIDEWALK LEADING TO BACK OF RAMP.
3. DETECTABLE WARNING SURFACES SHALL EXTEND 2.0 FT MINIMUM IN THE DIRECTION OF PEDESTRIAN TRAVEL.
4. DETECTABLE WARNING AREA CAN BE PLACED SQUARE WHERE USED IN A CURB RADIUS.
5. THE ROWS OF TRUNCATED DOMES IN DETECTABLE WARNING SURFACES SHOULD BE ALIGNED PERPENDICULAR TO THE GRADE BREAK BETWEEN THE RAMP RUN AND THE STREET. WHERE DETECTABLE WARNING SURFACES ARE PROVIDED ON A SURFACE WITH A SLOPE THAT IS LESS THAN 5 PERCENT, DOME ORIENTATION IS LESS CRITICAL.
6. DECTECTABLE WARNING AREA SHALL CONTRAST VISUALLY WITH ADJACENT GUTTER, STREET OR HIGHWAY, OR PEDESTRIAN ACCESS ROUTE SURFACE; RED COLOR SHALL BE USED.
7. MATS ARE TO BE RIGID WITH TURNED-DOWN EDGES EMBEDDED IN CONCRETE TO ELIMINATE TRIP HAZARD.
8. DIMENSIONS PER NCDOT 848.06

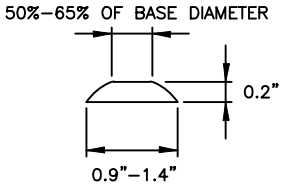

TRUNCATED DOME SECTION

NOT TO SCALE

Concord NORTH CAROLINA High Performance Living

TRUNCATED DOMES

3-2022

MI-110

SHEET 1 OF 1

NOTES:

1. ALL CONCRETE SHALL BE A MINIMUM OF 3600 PSI.
2. ENSURE FLUSH CONDITIONS AT CURB RAMP TO GUTTER TRANSITION.
3. TYPICALLY, THE SIDEWALK RUNNING SLOPE SHALL NOT EXCEED THE GENERAL GRADE ESTABLISHED FOR THE ADJACENT STREET.
4. MAINTAIN POSITIVE DRAINAGE ALONG THE LIP OF GUTTER IN RAMP. IN FLAT AREAS, ADDITIONAL CATCH BASINS MAY BE REQUIRED ON THE SIDES OF THE RAMP TO MINIMIZE STANDING WATER AT THE RAMP LOCATION.
5. IF THE SLOPE FROM FLOWLINE TO BACK OF CURB AT RAMP IS LESS THAN 8.33%, THEN THE SLOPE FROM LIP TO FLOWLINE AT RAMP MAY EXCEED 5% AS LONG AS THE ALGEBRAIC DIFFERENCE BETWEEN THESE TWO SLOPES IS LESS THAN 13.33%.
6. CURB RAMPS WITH RETURNED CURBS MAY BE USED ONLY WHERE PEDESTRIANS WOULD NOT TYPICALLY WALK ACROSS THE RAMP, THE ADJACENT SURFACE IS PLANTING OR OTHER NON-WALKING SURFACE, OR THE SIDE APPROACH IS SUBSTANTIALLY OBSTRUCTED.

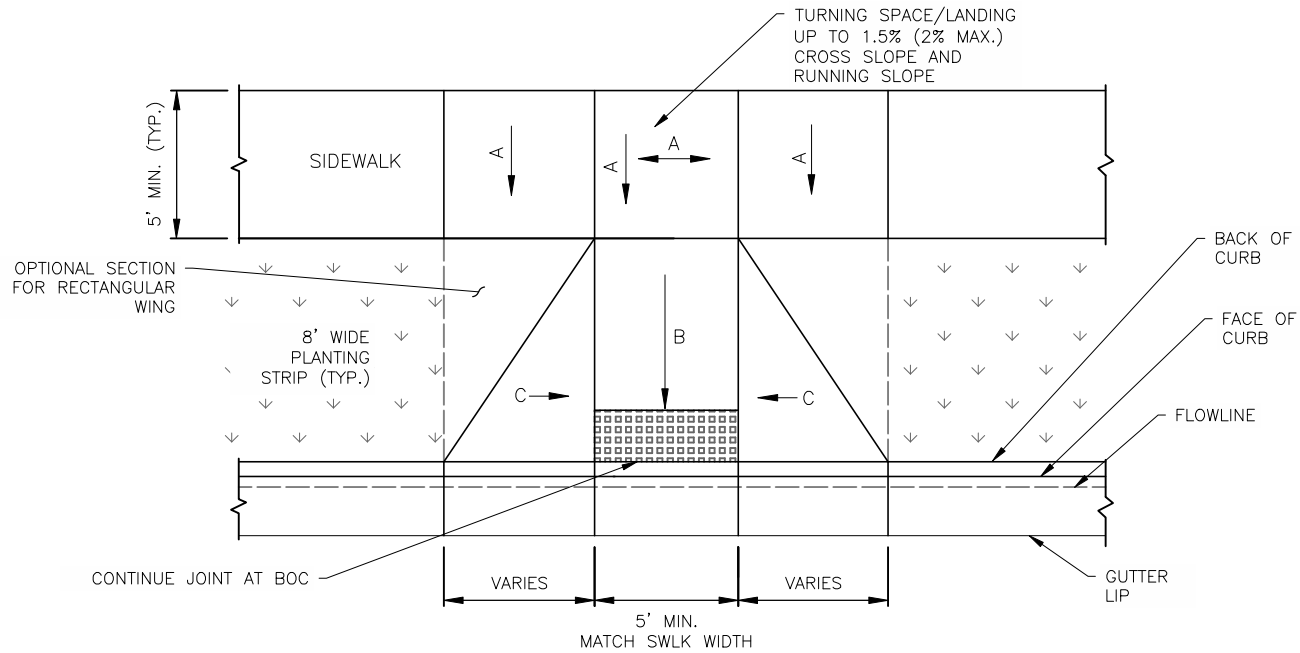

PLAN VIEW

SLOPE "A" = UP TO 1.5% (2.00% MAX)
SLOPE "B" = UP TO 7.5% (8.33% MAX)
SLOPE "C" = UP TO 10% MAX

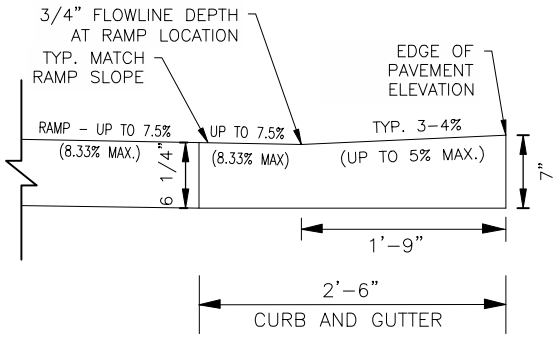

2'-6" CURB AND GUTTER RAMP DETAIL

MAXIMUM SLOPES FOR CURB AND GUTTER DEPRESSION AT RAMPS

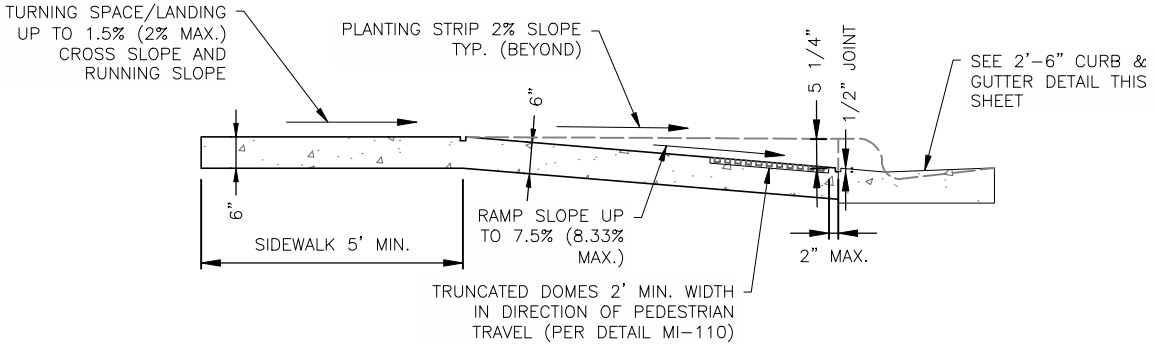

TYPICAL RAMP SECTION AT CENTERLINE

NOT TO SCALE

Concord NORTH CAROLINA High Performance Living

PERPENDICULAR CURB RAMP
2'-6" CURB & GUTTER

3-2022

MI-111

SHEET 1 OF 1

NOTES:

1. ALL CONCRETE SHALL BE A MINIMUM OF 3600 PSI.
2. ENSURE FLUSH CONDITIONS AT CURB RAMP TO GUTTER TRANSITION.
3. TYPICALLY, THE SIDEWALK RUNNING SLOPE SHALL NOT EXCEED THE GENERAL GRADE ESTABLISHED FOR THE ADJACENT STREET.
4. MAINTAIN POSITIVE DRAINAGE ALONG THE LIP OF GUTTER IN RAMP. IN FLAT AREAS, ADDITIONAL CATCH BASINS MAY BE REQUIRED ON THE SIDES OF THE RAMP TO MINIMIZE STANDING WATER AT THE RAMP LOCATION.
5. IF THE SLOPE FROM FLOWLINE TO BACK OF CURB AT RAMP IS LESS THAN 8.33%, THEN THE SLOPE FROM LIP TO FLOWLINE AT RAMP MAY EXCEED 5% AS LONG AS THE ALGEBRAIC DIFFERENCE BETWEEN THESE TWO SLOPES IS LESS THAN 13.33%.
6. CURB RAMPS WITH RETURNED CURBS MAY BE USED ONLY WHERE PEDESTRIANS WOULD NOT TYPICALLY WALK ACROSS THE RAMP, THE ADJACENT SURFACE IS PLANTING OR OTHER NON-WALKING SURFACE, OR THE SIDE APPROACH IS SUBSTANTIALLY OBSTRUCTED.

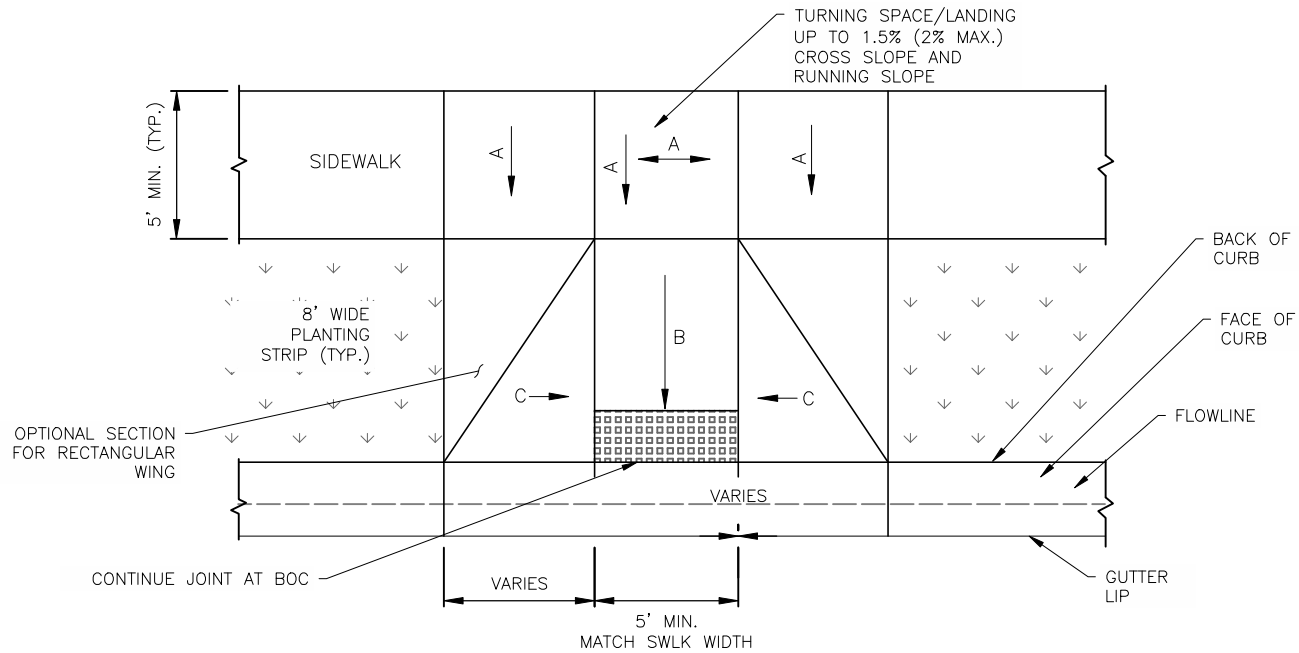

PLAN VIEW

SLOPE "A" = UP TO 1.5% (2.00% MAX)
SLOPE "B" = UP TO 7.5% (8.33% MAX)
SLOPE "C" = UP TO 10% MAX

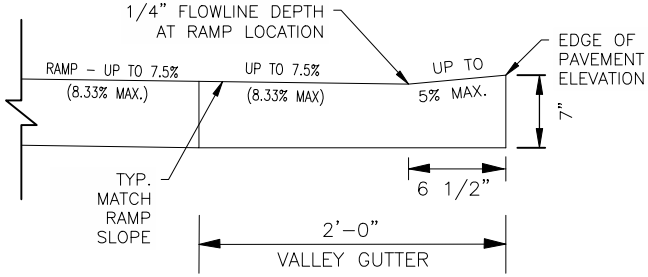

2'–0" CURB AND GUTTER DETAIL

MAXIMUM SLOPES FOR CURB AND GUTTER DEPRESSION AT DIRECTIONAL RAMPS

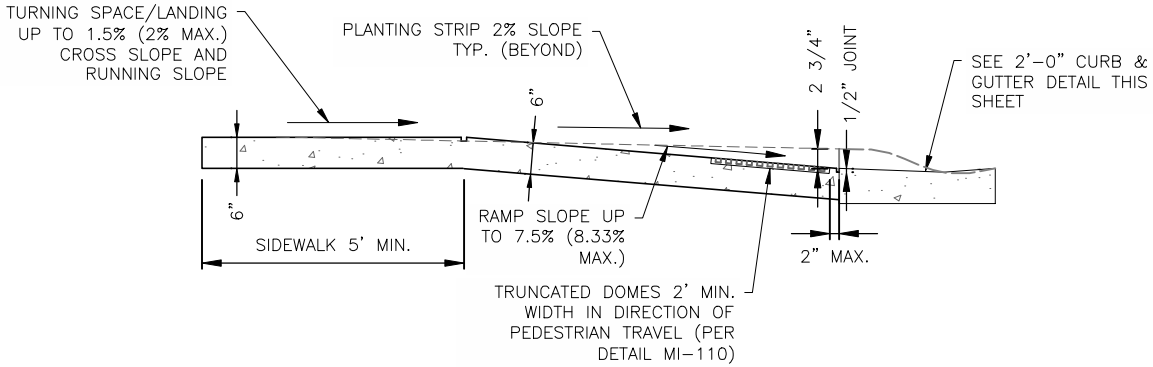

TYPICAL RAMP SECTION AT CENTERLINE

NOT TO SCALE

Concord NORTH CAROLINA High Performance Living

PERPENDICULAR CURB RAMP
2'–0" CURB & GUTTER

3–2022

MI–112

SHEET 1 OF 1

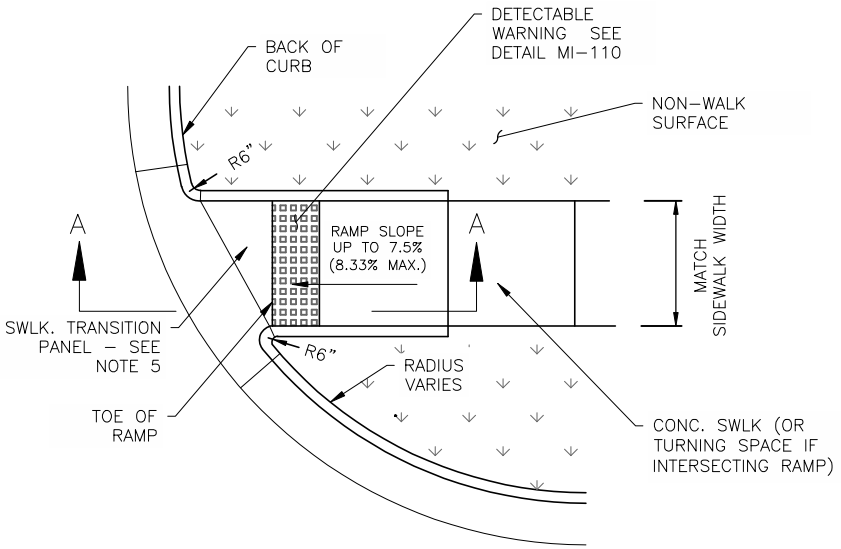

PLAN

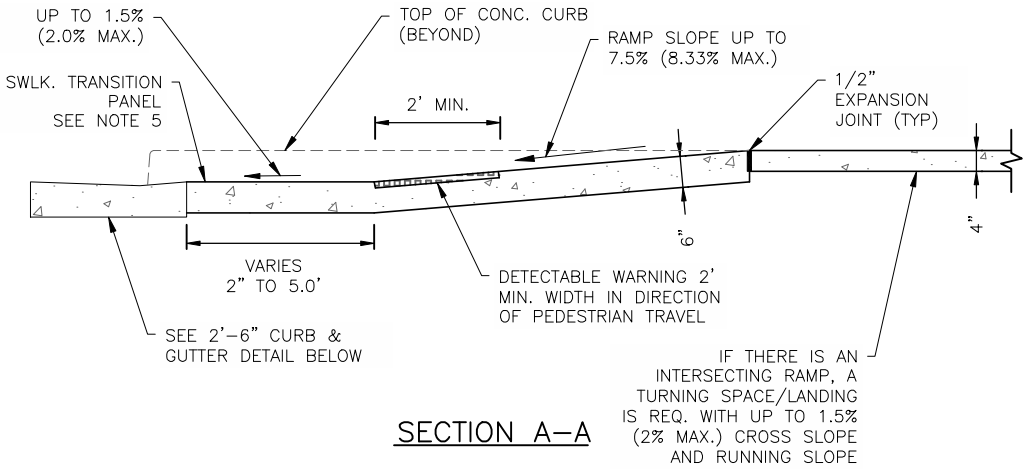

SECTION A–A

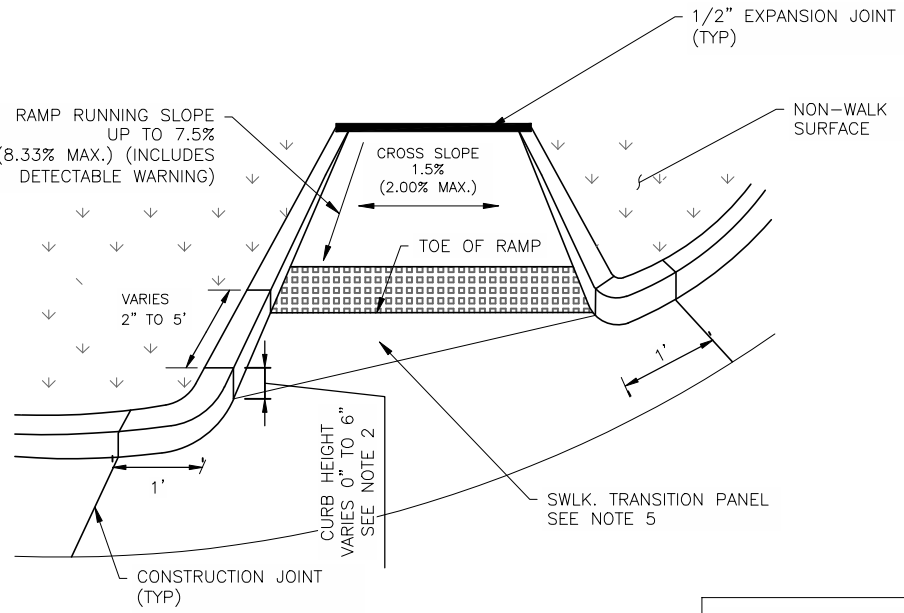

PERSPECTIVE

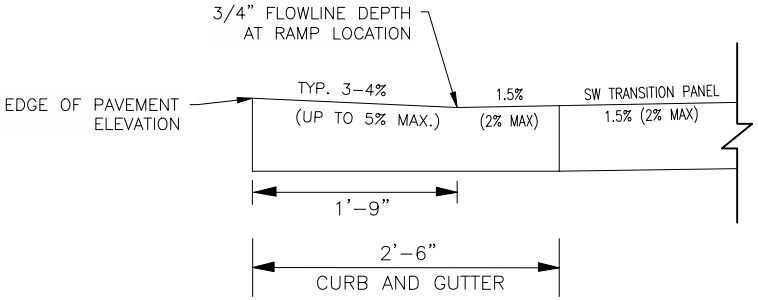

2'–6" CURB AND GUTTER DETAIL

MAXIMUM SLOPES FOR CURB AND GUTTER DEPRESSION AT DIRECTIONAL RAMPS

NOTES:

1. USE THIS DETAIL ONLY UNDER THE FOLLOWING CIRCUMSTANCES:
   - 5-FOOT SIDEWALKS WITH CURB RADII OF 35 FEET OR LESS
   - 6-FOOT SIDEWALKS WITH CURB RADII OF 30 FEET OR LESS
   - 8-FOOT SIDEWALKS WITH CURB RADII OF 25 FEET OR LESS
2. DIRECTIONAL RAMPS WITH RETURNED CURBS AS SHOWN MAY BE USED WHEN A PLANTING STRIP (NON-WALK SURFACE) IS PROVIDED. DO NOT USE THIS DETAIL IF THERE IS HARDSCAPE (WALKABLE SURFACE) INSTEAD OF A PLANTING STRIP. IF A WALKABLE SURFACE IS ADJACENT TO RAMP CONSTRUCT CONCRETE FLARES WITH SLOPES UP TO 10% MAX, INSTEAD OF RETURNED CURBS.
3. ALL CONCRETE SHALL BE AT LEAST 3600 PSI.
4. ENSURE FLUSH CONDITIONS AT RAMP TO GUTTER TRANSITION.
5. SIDEWALK TRANSITION PANEL: PREFERRED DESIGN IS 1.5% (2.0% MAX) IN ALL DIRECTIONS IN FRONT OF GRADE BREAK & DRAIN TO FLOW LINE. RUNNING SLOPE OF THIS AREA MUST NOT EXCEED 2%. CROSS-SLOPE MAY MATCH STREET GRADE AT BACK OF CURB WHEN STREET GRADE >2%. TRANSITION TO 1.5% (2.0% MAX) CROSS-SLOPE AT TOE OF RAMP.

THIS DETAIL IS NOT FOR USE ON NCDOT-MAINTAINED STREETS.

NOT TO SCALE

Concord NORTH CAROLINA High Performance Living

DIRECTIONAL CURP RAMP SMALL/MEDIUM CURB RADII

3-2022

MI-113

SHEET 1 OF 1

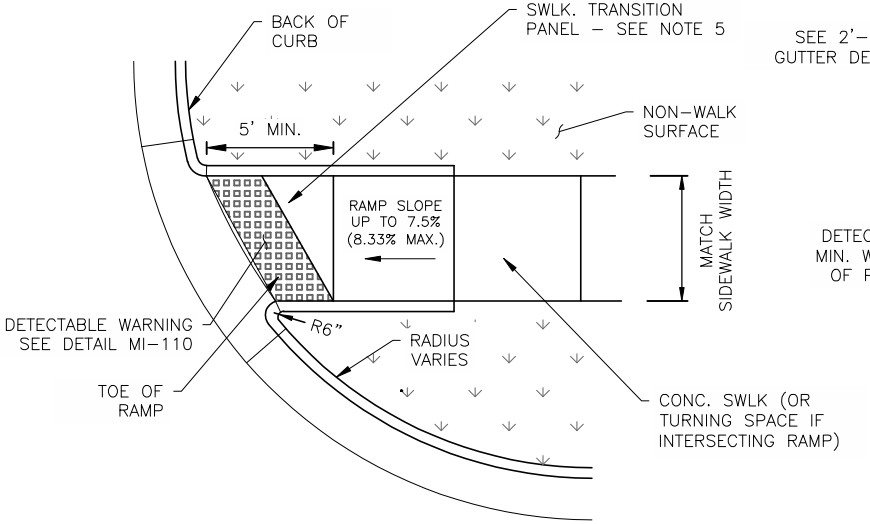

PLAN

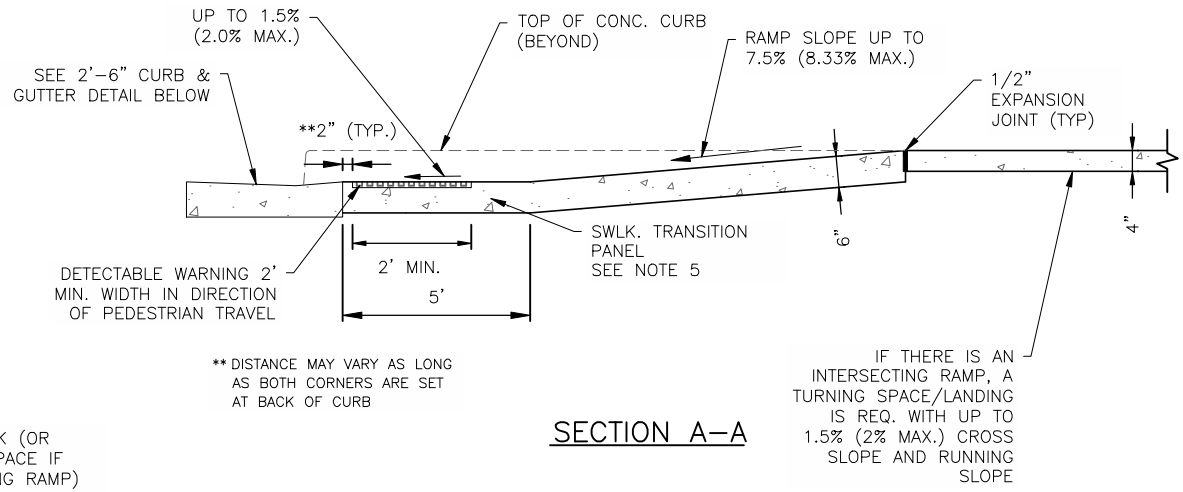

SECTION A–A

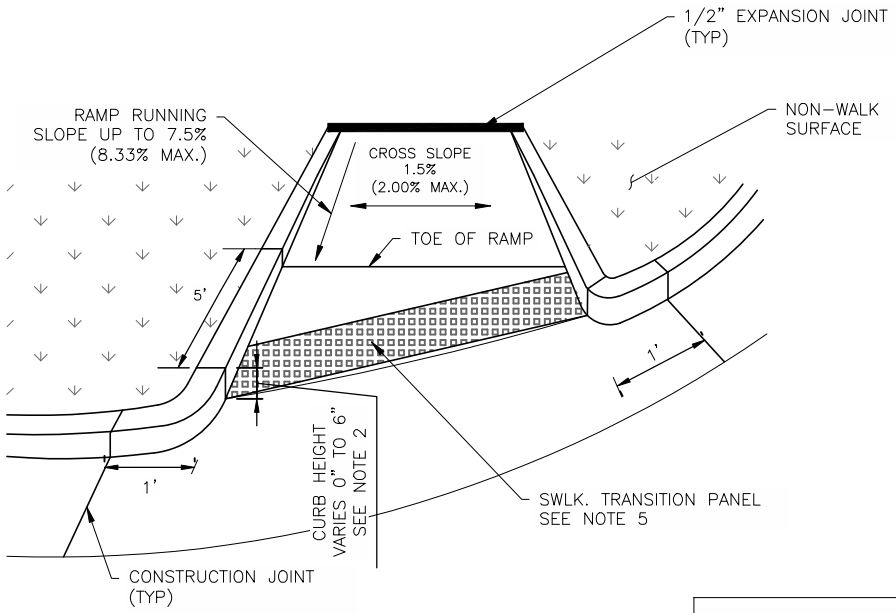

PERSPECTIVE

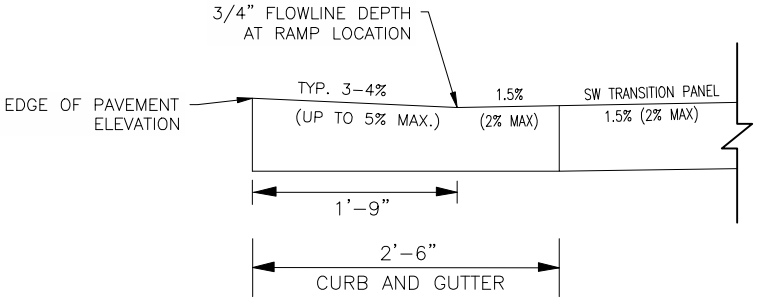

2'–6" CURB AND GUTTER DETAIL

MAXIMUM SLOPES FOR CURB AND GUTTER DEPRESSION AT DIRECTIONAL RAMPS

NOTES:

1. USE THIS DETAIL ONLY UNDER THE FOLLOWING CIRCUMSTANCES:
   - 5–FOOT SIDEWALKS WITH CURB RADII OF GREATER THAN 35 FEET
   - 6–FOOT SIDEWALKS WITH CURB RADII OF GREATER THAN 30 FEET
   - 8–FOOT SIDEWALKS WITH CURB RADII OF GREATER THAN 25 FEET
2. DIRECTIONAL RAMPS WITH RETURNED CURBS AS SHOWN MAY BE USED WHEN A PLANTING STRIP (NON–WALK SURFACE) IS PROVIDED. DO NOT USE THIS DETAIL IF THERE IS HARDSCAPE (WALKABLE SURFACE) INSTEAD OF A PLANTING STRIP. IF A WALKABLE SURFACE IS ADJACENT TO RAMP CONSTRUCT CONCRETE FLARES WITH SLOPES UP TO 10% MAX, INSTEAD OF RETURNED CURBS.
3. ALL CONCRETE SHALL BE AT LEAST 3600 PSI.
4. ENSURE FLUSH CONDITIONS AT RAMP TO GUTTER TRANSITION.
5. SIDEWALK TRANSITION PANEL: PREFERRED DESIGN IS 1.5% (2.0% MAX) IN ALL DIRECTIONS IN FRONT OF GRADE BREAK & DRAIN TO FLOW LINE. RUNNING SLOPE OF THIS AREA MUST NOT EXCEED 2%. CROSS–SLOPE MAY MATCH STREET GRADE AT BACK OF CURB WHEN STREET GRADE >2%. TRANSITION TO 1.5% (2.0% MAX) CROSS–SLOPE AT TOE OF RAMP.

THIS DETAIL IS NOT FOR USE ON NCDOT–MAINTAINED STREETS.

NOT TO SCALE

Concord NORTH CAROLINA High Performance Living

DIRECTIONAL CURB RAMP LARGE CURB RADIUS

3–2022

MI–114

SHEET 1 OF 1

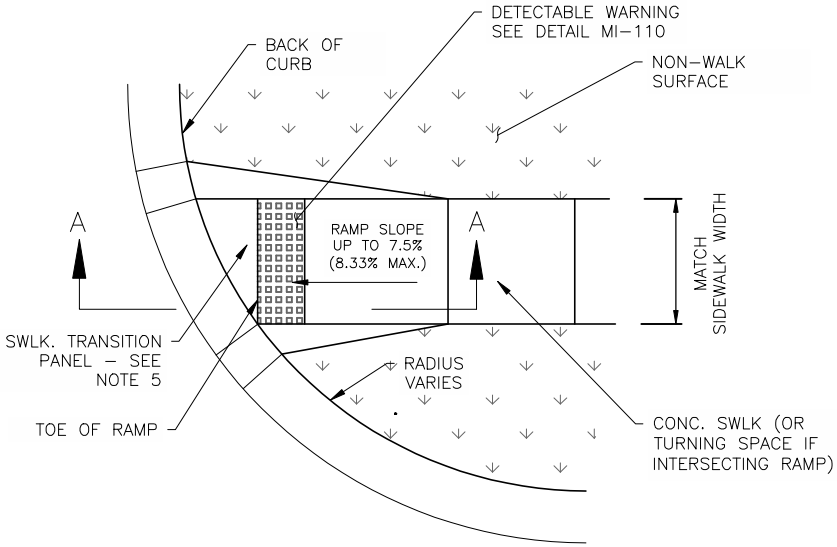

PLAN

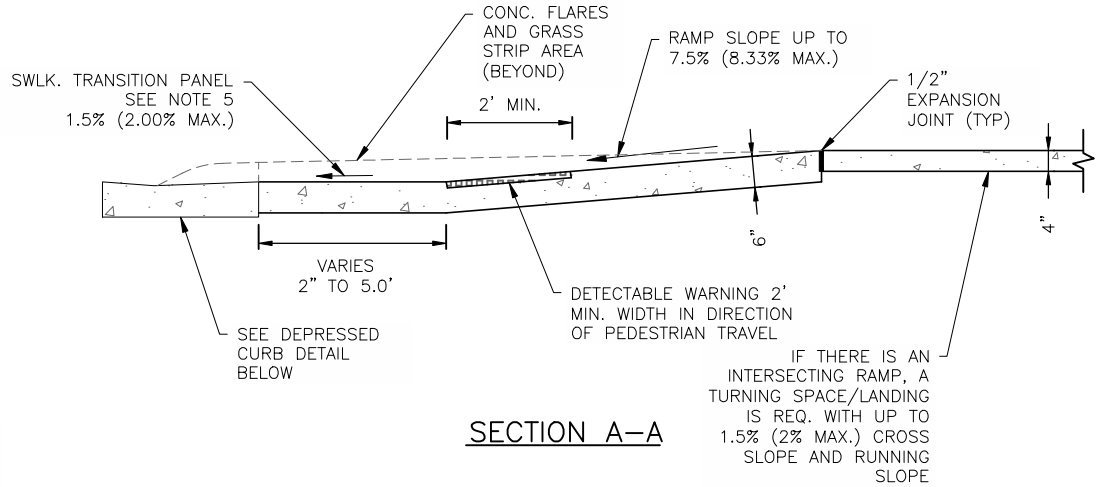

SECTION A–A

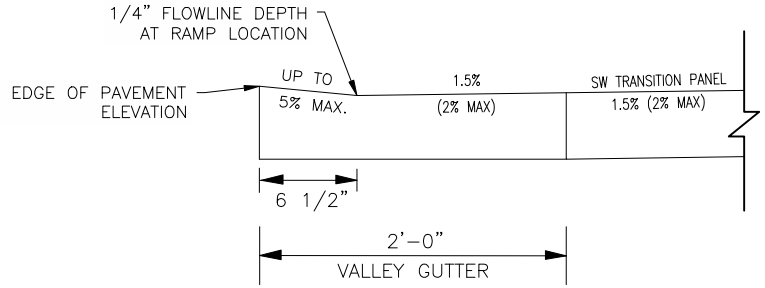

2'–0" CURB AND GUTTER DETAIL

MAXIMUM SLOPES FOR CURB AND GUTTER DEPRESSION AT DIRECTIONAL RAMPS

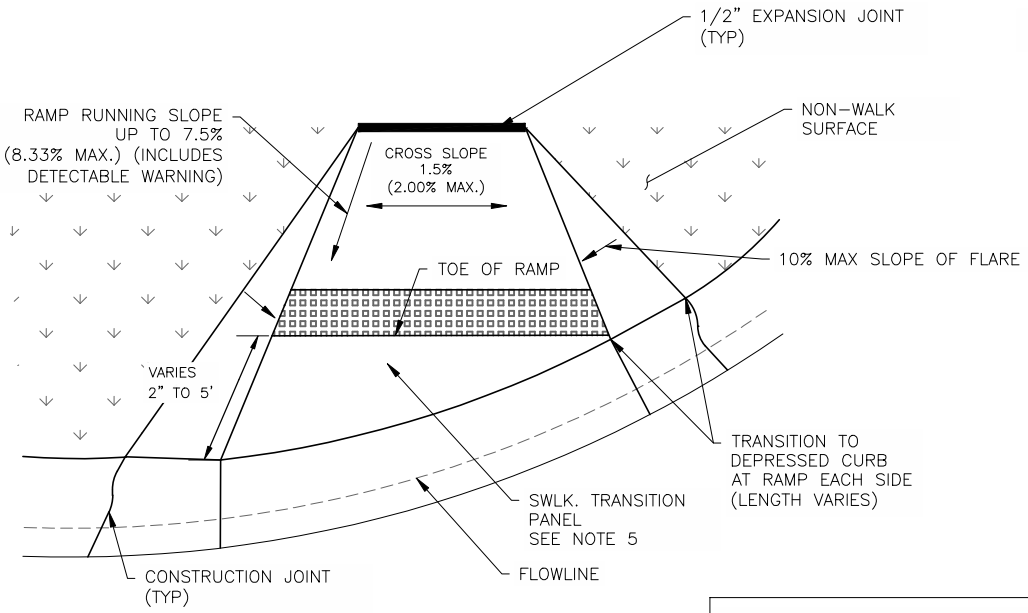

PERSPECTIVE

NOTES:

1. USE THIS DETAIL ONLY UNDER THE FOLLOWING CIRCUMSTANCES:
   - 5-FOOT SIDEWALKS WITH CURB RADII OF 35 FEET OR LESS
   - 6-FOOT SIDEWALKS WITH CURB RADII OF 30 FEET OR LESS
   - 8-FOOT SIDEWALKS WITH CURB RADII OF 25 FEET OR LESS
2. DIRECTIONAL RAMPS WITH RETURNED CURBS AS SHOWN MAY BE USED WHEN A PLANTING STRIP (NON-WALK SURFACE) IS PROVIDED. DO NOT USE THIS DETAIL IF THERE IS HARDSCAPE (WALKABLE SURFACE) INSTEAD OF A PLANTING STRIP. IF A WALKABLE SURFACE IS ADJACENT TO RAMP CONSTRUCT CONCRETE FLARES WITH SLOPES UP TO 10% MAX, INSTEAD OF RETURNED CURBS.
3. ALL CONCRETE SHALL BE AT LEAST 3600 PSI.
4. ENSURE FLUSH CONDITIONS AT RAMP TO GUTTER TRANSITION.
5. SIDEWALK TRANSITION PANEL: PREFERRED DESIGN IS 1.5% (2.0% MAX) IN ALL DIRECTIONS IN FRONT OF GRADE BREAK & DRAIN TO FLOW LINE. RUNNING SLOPE OF THIS AREA MUST NOT EXCEED 2%. CROSS-SLOPE MAY MATCH STREET GRADE AT BACK OF CURB WHEN STREET GRADE >2%. TRANSITION TO 1.5% (2.0% MAX) CROSS-SLOPE AT TOE OF RAMP.

THIS DETAIL IS NOT FOR USE ON NCDOT-MAINTAINED STREETS.

NOT TO SCALE

Concord NORTH CAROLINA High Performance Living

DIRECTIONAL CURB RAMP VALLEY CURB

3-2022

MI-115

SHEET 1 OF 1

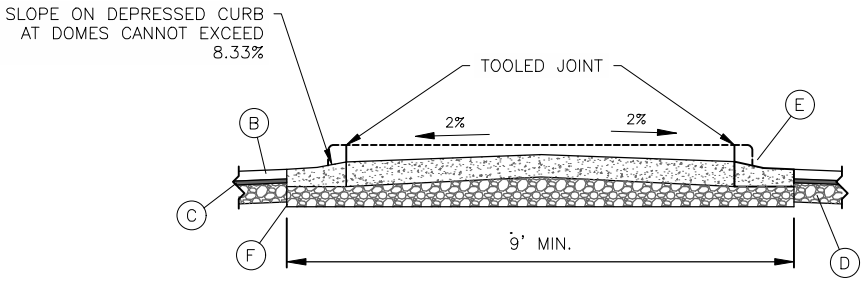

SECTION A–A

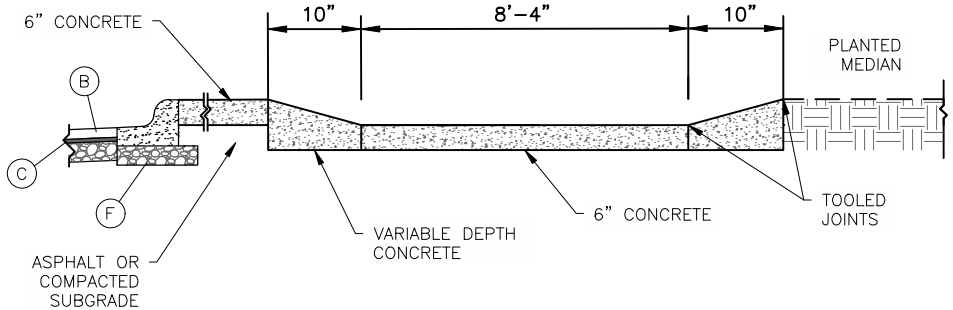

SECTION B–B

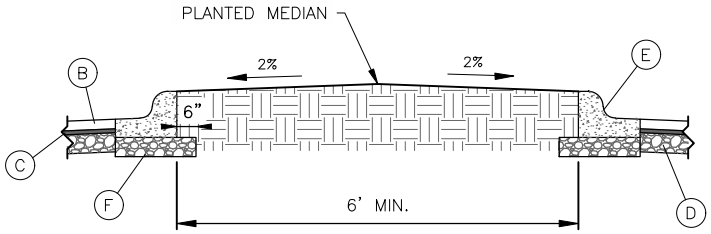

SECTION C–C

NOTES:

1. THIS DETAIL MAY BE USED ON NCDOT–MAINTAINED STREETS ONLY WITH APPROVAL FROM NCDOT.
2. ENSURE PEDESTRIAN PASS–THRU HAS ADEQUATE SLOPE DRAINAGE AND DOES NOT POND WATER.
3. THIS DETAIL MAY BE USED TO PROVIDE A PEDESTRIAN REFUGE PASS–THRU IN AN EXISTING MEDIAN WITH 1'–6" CURB & GUTTER.
4. FOR 1'–6" CURB AND GUTTER, USE CONCORD STANDARD MI–101 FOR CITY STREETS OR NCDOT 846.01 FOR NCDOT STREETS.
5. NCDOT REQUIRES 1' OFFSET FROM EDGE OF PAVEMENT ALONG CURBLINE TO LANE LINE.
6. ALL JOINTS IN THE ISLAND MUST BE SEALED PER APPROPRIATE STANDARD.
7. USE "QWICK KURB L104 REFLECTIVE YELLOW PADDLE" OR EQUIVALENT.
8. CONCORD STANDARD MISC–201 TO BE FOLLOWED IF MEDIAN IS BEING INSTALLED IN EXISTING PAVEMENT.

KEY

- (B) SURFACE COURSE PER APPROPRIATE TYPICAL CROSS SECTION STANDARD
- (C) INTERMEDIATE COURSE PER APPROPRIATE TYPICAL CROSS SECTION STANDARD
- (D) BASE COURSE PER APPROPRIATE TYPICAL CROSS SECTION STANDARD
- (E) 1'–6" STANDARD CURB AND GUTTER
- (F) 6" COMPACTED AGGREGATE BASE COURSE OR 4" B–25.0C BASE COURSE

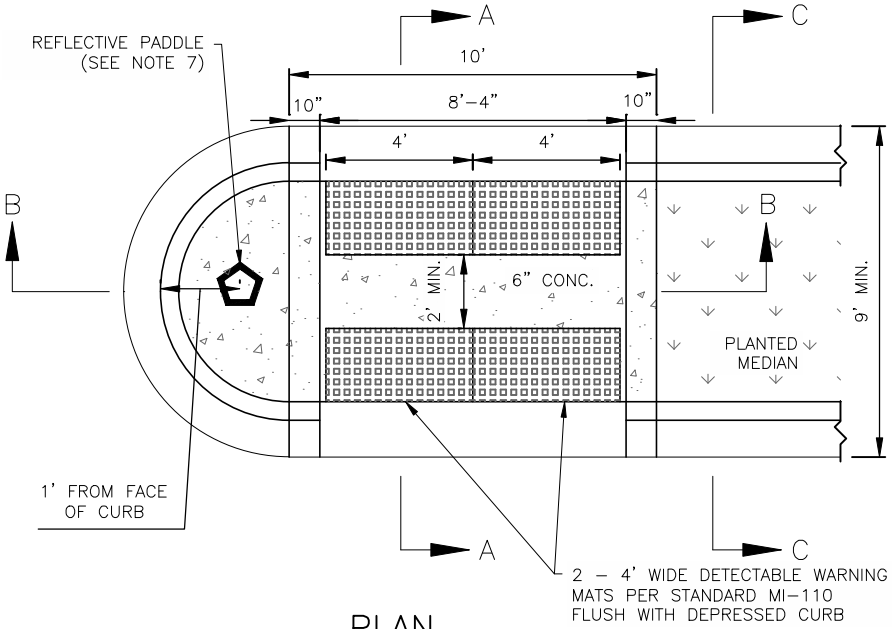

PLAN

NOT TO SCALE

Concord NORTH CAROLINA High Performance Living

PEDESTRIAN REFUGE (1'–6" CURB & GUTTER)

3–2022

MI–116

SHEET 1 OF 1

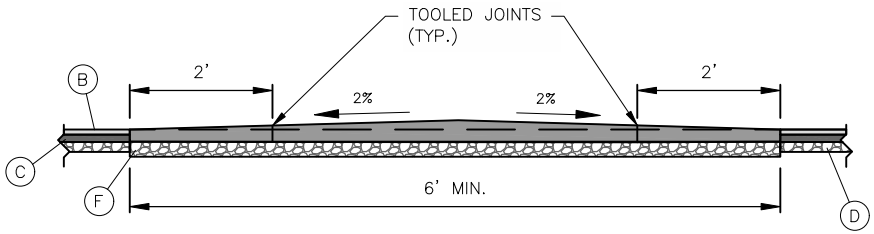

SECTION A–A

NOTES:

1. THIS DETAIL MAY BE USED ON NCDOT–MAINTAINED STREETS ONLY WITH APPROVAL FROM NCDOT.
2. ENSURE PEDESTRIAN PASS–THRU HAS ADEQUATE SLOPE DRAINAGE AND DOES NOT POND WATER.
3. NCDOT REQUIRES 1' OFFSET FROM EDGE OF PAVEMENT ALONG CURBLINE TO LANE LINE.
4. ALL JOINTS IN THE ISLAND MUST BE SEALED PER APPROPRIATE STANDARD.
5. USE "QWICK KURB L104 REFLECTIVE YELLOW PADDLE" OR EQUIVALENT.
6. CONCORD STANDARD MISC–201 TO BE FOLLOWED IF MEDIAN IS BEING INSTALLED IN EXISTING PAVEMENT.

KEY

- (B) SURFACE COURSE PER APPROPRIATE TYPICAL CROSS SECTION STANDARD
- (C) INTERMEDIATE COURSE PER APPROPRIATE TYPICAL CROSS SECTION STANDARD
- (D) BASE COURSE PER APPROPRIATE TYPICAL CROSS SECTION STANDARD
- (E) 1'–6" STANDARD CURB AND GUTTER
- (F) 6" COMPACTED AGGREGATE BASE COURSE OR 4" B–25.0C BASE COURSE

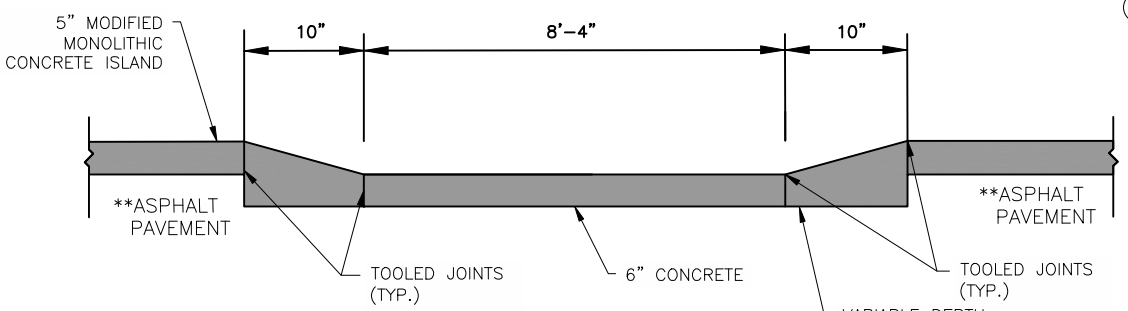

SECTION B–B

** ASPHALT PAVEMENT PER APPROPRIATE TYPICAL CROSS SECTION STANDARD

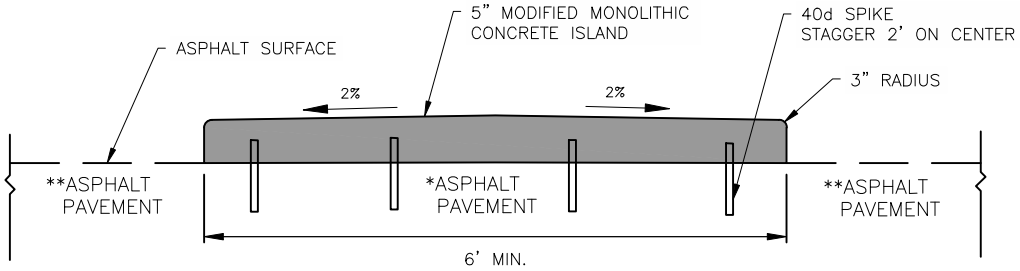

SECTION C–C

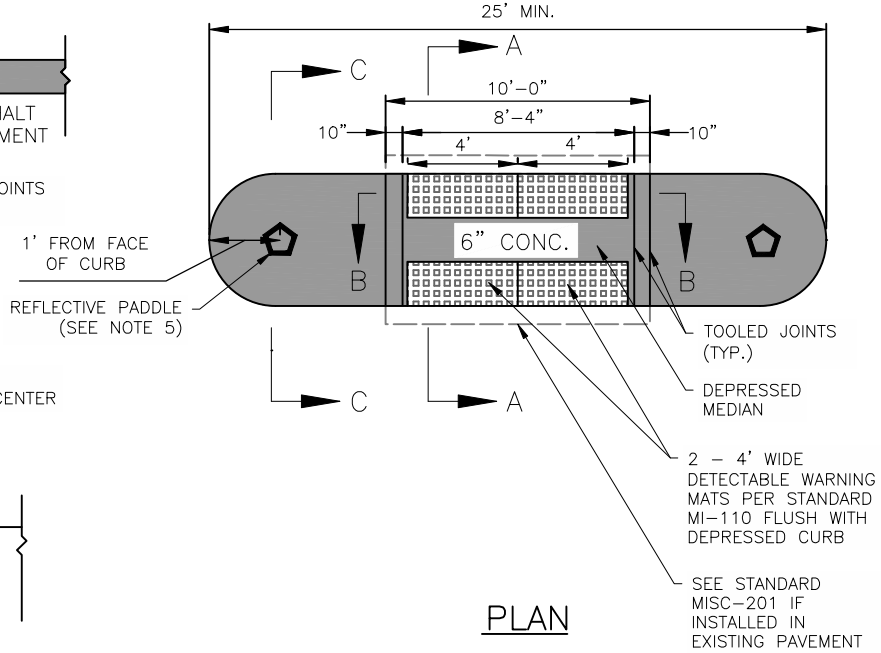

PLAN

NOT TO SCALE

Concord NORTH CAROLINA High Performance Living

PEDESTRIAN REFUGE (MONOLITHIC CONCRETE)

3–2022

MI–117

SHEET 1 OF 1

NOTES:

1. **NEW PAVEMENT SHALL HAVE SECTION THICKNESS DESIGNED TO NCDOT SUPERPAVE STANDARDS AS PROVIDED BY ENGINEER OR MATCH EXISTING CONSTRUCTION, WHICH EVER IS GREATER.**

KEY

(A) 4" SIDEWALK

*DRIVEWAY APRON AND SIDEWALK AT DRIVEWAY CROSSINGS SHOULD BE 6" THICK

(B) EXISTING PAVEMENT

(C) MIN. 1 ½" S 9.5B SURFACE COURSE*

(E) 2'–6" STANDARD CURB AND GUTTER SHOWN, APPROPRIATE CURB & GUTTER TO BE DETERMINED BASED ON STREET CLASSIFICATION

(F) 6" COMPACTED AGGREGATE BASE COURSE OR 4" B–25.0C BASE COURSE

(G) MIN. 8" I–19.0C**

(K) PLANTING STRIP ADJACENT TO SIDEWALK SHALL BE GRADED TO 1/4" PER FOOT (MIN.) TO 1–1/4" PER FOOT (MAX.). PRIOR APPROVAL REQUIRED FOR STEEPER GRADES

(L) MILLING LIMITS SHOULD BE TO EITHER THE CENTERLINE OF 2 LANE UNDIVIDED STREETS, TO THE OPPOSITE EDGE OF PAVEMENT ON 2 LANE DIVIDED STREETS, OR TO THE FULL WIDTH OF THE FIRST LANE FOR MULTI–LANE STREETS.

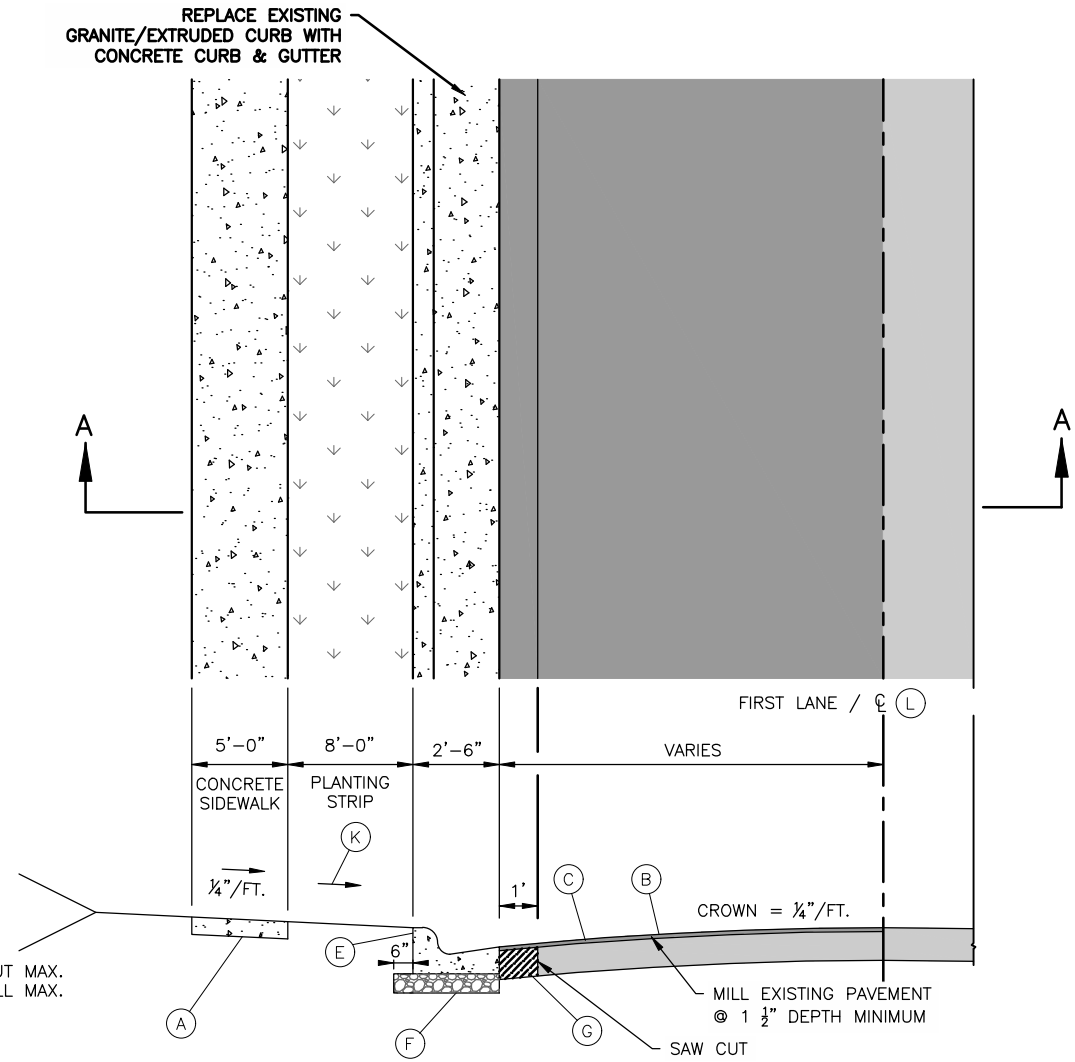

SECTION A – A

NOT TO SCALE

Concord NORTH CAROLINA High Performance Living

CURB & GUTTER REMOVAL / REPLACEMENT

3–2022

MISC–201

SHEET 1 OF 1

NOTES:

1. NEW PAVEMENT SHALL HAVE SECTION THICKNESS DESIGNED TO NCDOT SUPERPAVE STANDARDS AS PROVIDED BY ENGINEER OR MATCH EXISTING CONSTRUCTION, WHICH EVER IS GREATER.
2. TRENCH IS TO BE BACKFILLED IN COMPACTED 6" LAYERS BEFORE PAVEMENT REPAIRS ARE MADE.
3. REFER TO EARTHWORK SPECIFICATIONS FOR EMBEDMENT AND FILL REQUIREMENTS.
4. THIS DETAIL SHOWS ASPHALT PAVEMENT REPLACEMENT. THE WIDTH OF PAY LIMITS SHALL APPLY TO STONE AND CONCRETE PAVEMENT AS WELL.

KEY

(B) SURFACE COURSE MATCH EXISTING | S9.5B (MIN. 2 1/2")

(C) INTERMEDIATE COURSE MATCH EXISTING | I-19.0C (MIN. 2 1/4")

(D) BASE COURSE MATCH EXISTING/PROPOSED | B25.0C COMPACTED SUBGRADE (MIN. 8")

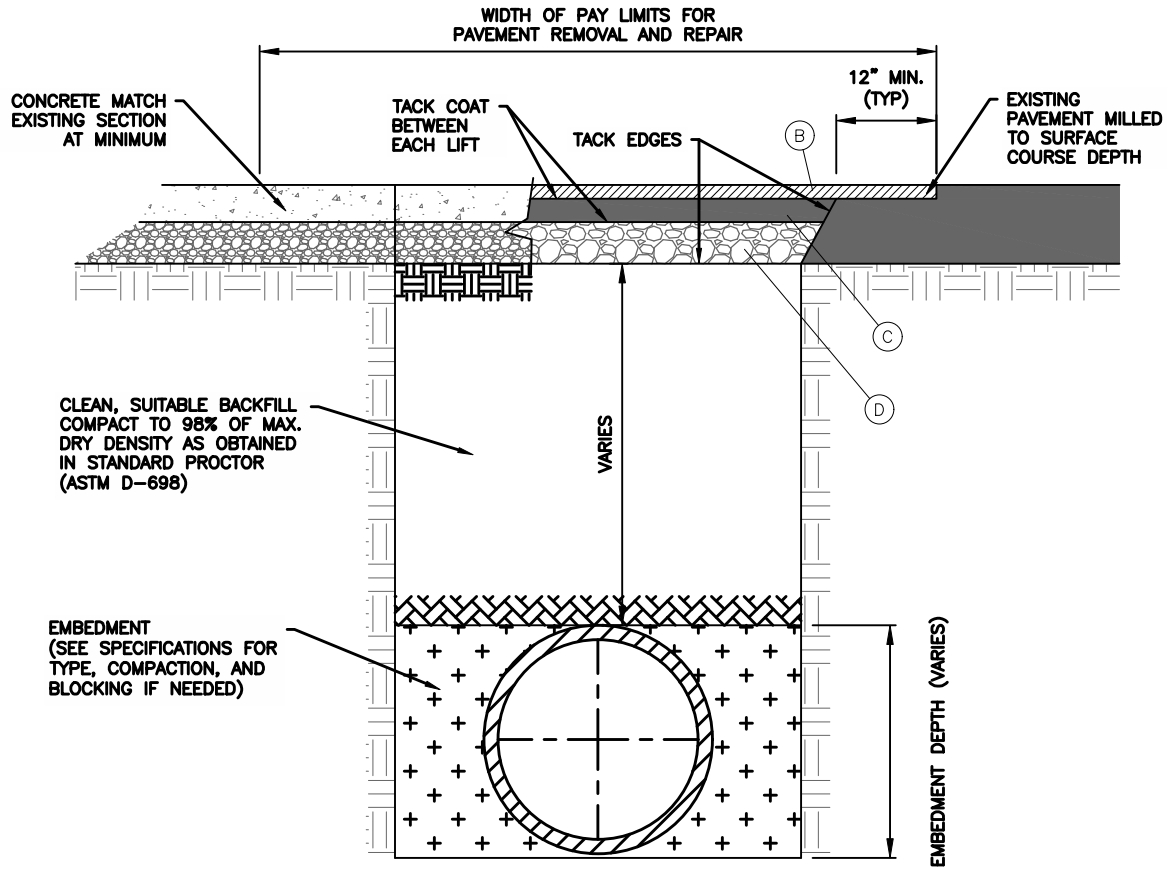

NOT TO SCALE

Concord NORTH CAROLINA High Performance Living

UTILITY CUT REPLACEMENT DETAIL

3-2022

MISC-202

SHEET 1 OF 1

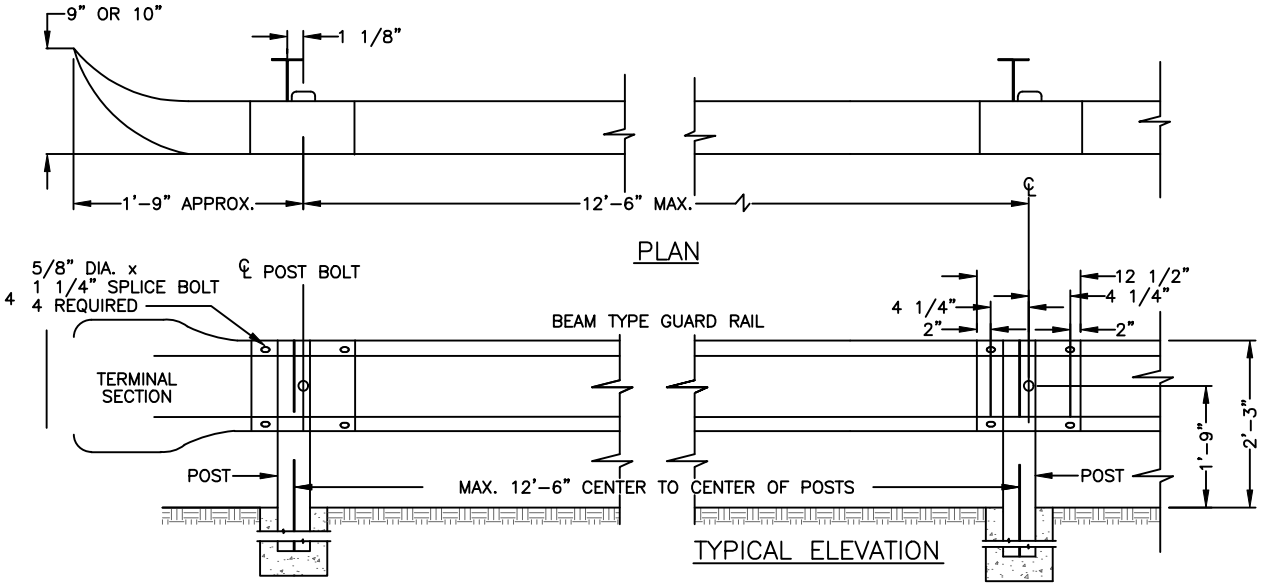

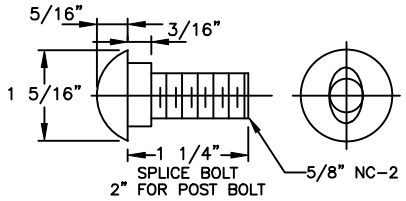

DETAIL OF BOLT

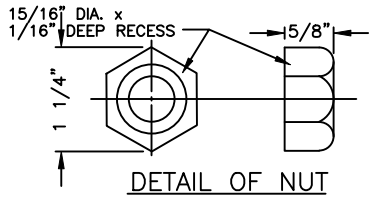

DETAIL OF NUT

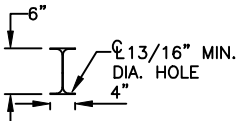

W 6 x 8.5

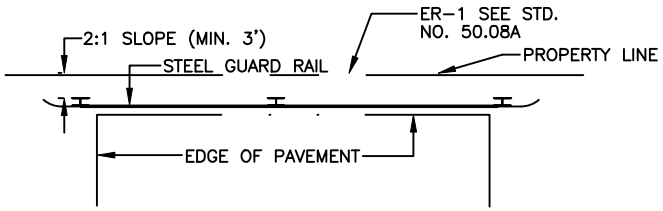

DEAD-END STREET BARRICADE

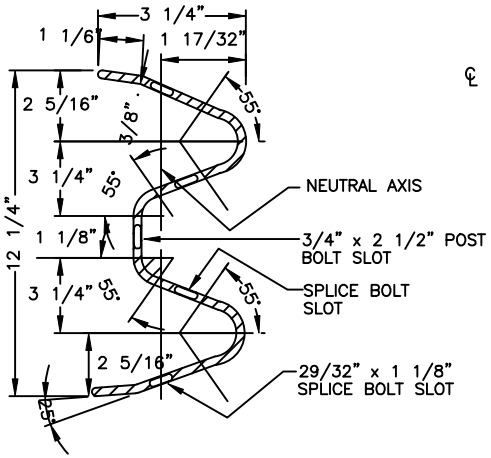

SECTION THRU RAIL ELEMENT

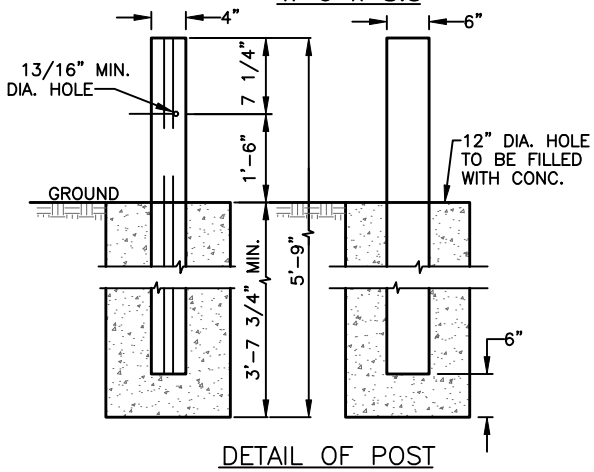

DETAIL OF POST

NOTE

THIS DETAIL IS NOT A GUARDRAIL DETAIL. FOR ROADSIDE GUARDRAIL, SEE NCDOT STANDARD DRAWINGS 862.01-862.04.

NOT TO SCALE

Concord NORTH CAROLINA High Performance Living

END OF ROAD BARRICADE

3-2022

MISC-203

SHEET 1 OF 2

GENERAL NOTES:

1. STEEL BEAM TYPE GUARD RAILS SHALL BE INSTALLED AT THE END OF ALL DEAD–END STREETS, EXCEPT CUL–DE–SAC STREETS WHICH HAVE BEEN IMPROVED WITH A PERMANENT TURN–AROUND.

2. FOR STREETS 26' IN WIDTH THE GUARD RAIL SHALL CONSIST OF TWO(2) 12'–6" SECTIONS OR ONE(1) 25' SECTION, THREE (3) STEEL POSTS, AND TWO (2) TERMINAL SECTIONS. FOR STREETS GREATER THAN 25' IN WIDTH THE GUARD RAIL SHALL SPAN THE ENTIRE WIDTH OF THE STREET.

3. GUARD RAIL SHALL CONSIST OF RAIL ELEMENTS FABRICATED TO DEVELOP CONTINUOUS BEAM STRENGTH AND INSTALLED AS SHOWN.

4. MINIMUM THICKNESS OF GUARD RAIL SHALL BE 12 GAGE U.S. STANDARD. THE RAIL ELEMENT INCLUDING SPLICES, SHALL HAVE A MINIMUM ULTIMATE TENSILE STRENGTH OF 80,000 LBS. GUARD RAIL PARTS FURNISHED SHALL BE INTERCHANGEABLE WITH SIMILAR PARTS REGARDLESS OF THE SOURCE OF MANUFACTURER. THE HOLES FOR CONNECTING BOLTS SHALL BE PUNCHED OF DRILLED, BURNING WILL NOT BE PERMITTED.

5. THE GUARD, BOLTS, NUTS, STEEL POSTS. AND ALL OTHER METAL PARTS SHALL BE GALVANIZED TO CONFORM TO THE REQUIREMENTS FOR THE COATING CLASS, (2.50 OUNCES PER SQUARE FOOT) OF THE CURRENT SPECIFICATIONS FOR ZINC–COATED (GALVANIZED) IRON, AND STEEL SHEETS, COILS, AND CUT LENGTHS, IN ACCORDANCE WITH ASTM 123A.

6. IF THE AVERAGE SPELTER COATING AS DETERMINED FROM THE REQUIRED SAMPLES IS LESS THAN TWO (2) OUNCES OF SPELTER PER SQUARE FOOT, OR IF ANY ONE SPECIMEN HAS LESS THAN 1.8 ONCES OF SPELTER PER SQUARE FOOT OF DOUBLE EXPOSED SURFACE, THE LOT SAMPLED SHALL BE REJECTED, THE FINISHED SHEETS SHALL BE OF FIRST CLASS COMMERCIAL QUALITY, FREE FROM INJURIOUS DEFECTS, SUCH AS BLISTERS, FLUX, AND UNCOATED SPOTS.

7. THE GUARD RAIL SHALL BE INSPECTED TO DETERMINE THAT THE MATERIAL, DIMENSIONS, AND WORKMANSHIP ARE IN ACCORDANCE WITH THIS PLAN.

8. WHERE A DEAD–END STREET REQUIRES A BARRICADE, END OF ROADWAY MARKER SIGNS SHALL ALSO BE REQUIRED. (SEE STD. MISC–204).

NOT TO SCALE

Concord NORTH CAROLINA High Performance Living

END OF ROAD BARRICADE

3–2022

MISC–203

NOTES:

1. WHEN A DEAD-END OR STUBBED STREET REQUIRES A BARRICADE, END-OF-ROADWAY MARKER SIGNS (OM4-3, 24"x24", SOLID RED) SHALL BE PROVIDED.

2. SIGNS ARE TO BE PLACED BEHIND THE BARRICADE (SEE DETAIL MISC-203), EVENLY SPACED WITH ONE SIGN PLACED AT THE CENTERLINE LOCATION AND ADDITIONAL SIGNS AT 6' O.C. (MINIMUM OF 3 SIGNS, MAXIMUM OF 5 SIGNS).

3. WHEN BARRICADE IS USED ON A STREET STUB, THE SIGN AT THE CENTERLINE SHALL BE SUPPLEMENTED WITH A STREET CONNECTIVITY SIGN. SEE DETAIL MISC-205.

4. ALL SIGNS/MARKERS SHALL MEET OR EXCEED MUTCD STANDARDS FOR RETROREFLECTIVITY.

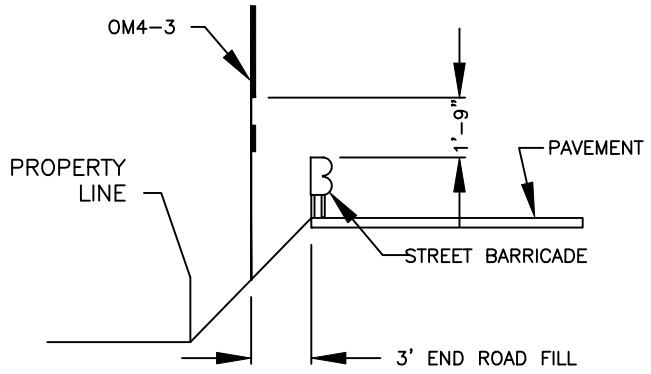

SIGN LOCATION DETAIL

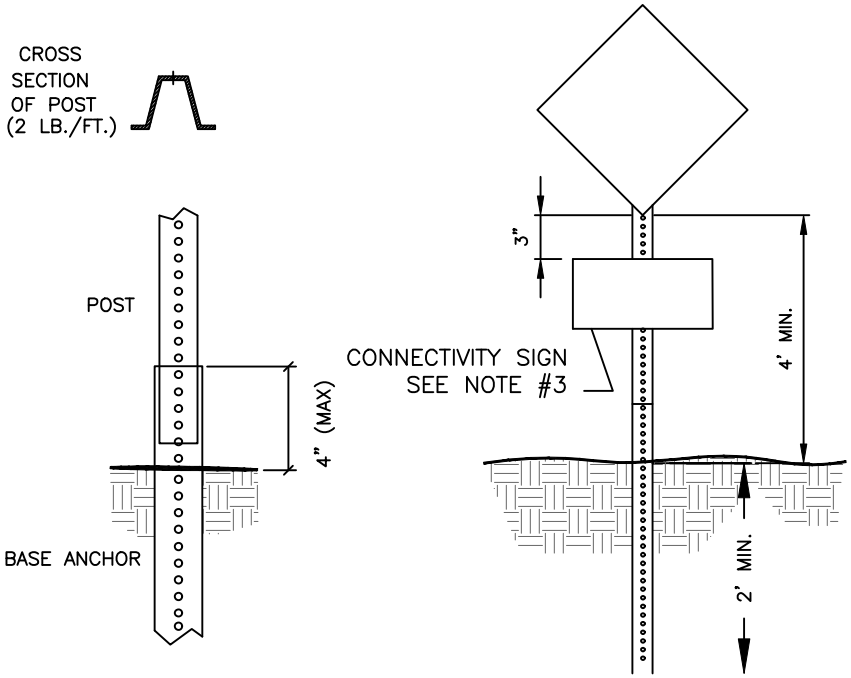

NOT TO SCALE

Concord NORTH CAROLINA High Performance Living

END OF ROAD MARKER

3-2022

MISC-204

SHEET 1 OF 1

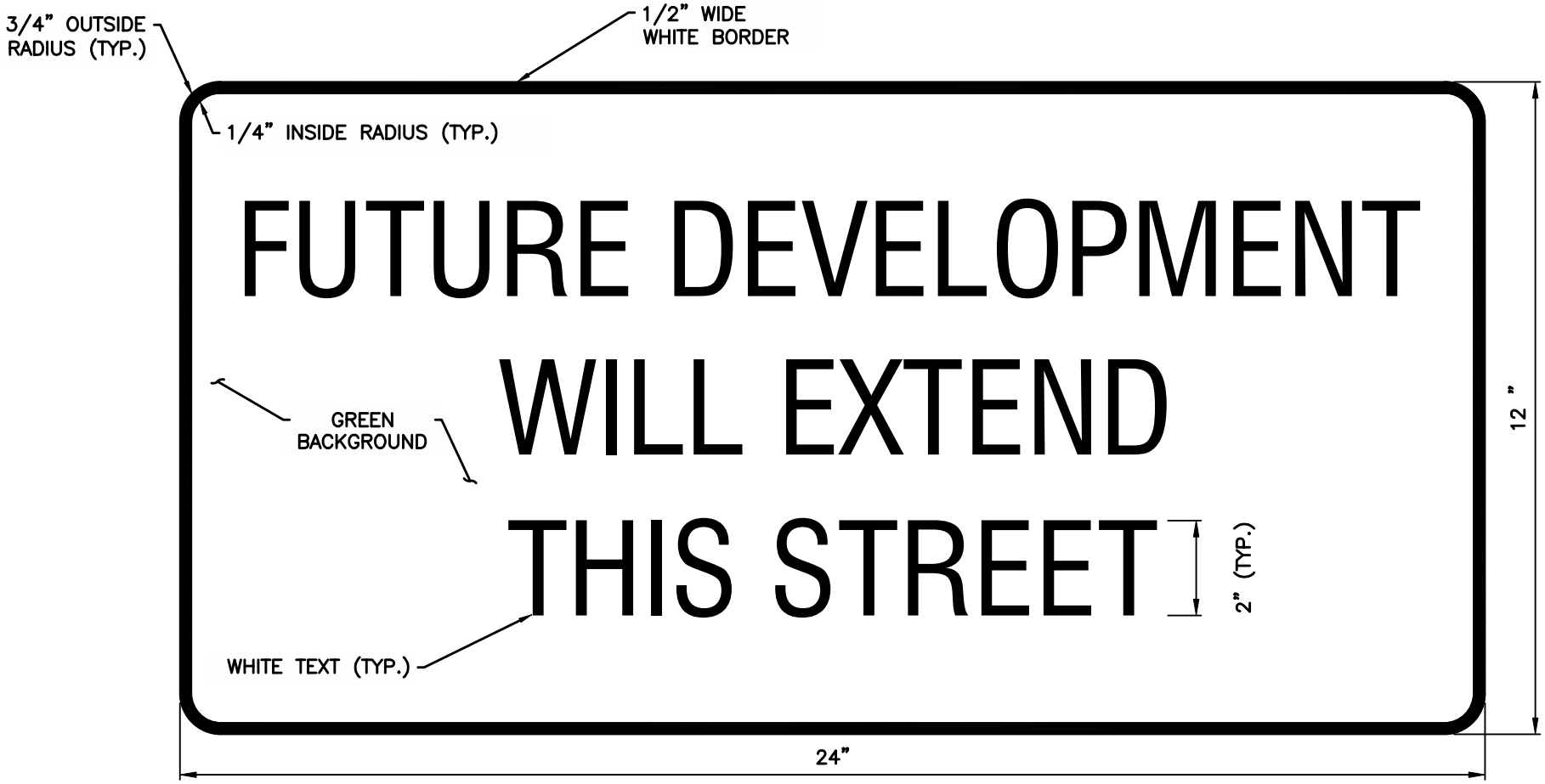

NOTES:

1. SIGN SHALL MEET OR EXCEED MUTCD STANDARDS FOR RETROREFLECTIVITY
2. SIGN MATERIAL SHALL BE 0.080" THICK ALUMINUM
3. ALL LETTERS SHALL BE SERIES B-2000 FROM THE 2004 STANDARD HIGHWAY SIGNS MANUAL (AND ANY REVISION THERETO) PUBLISHED BY THE FEDERAL HIGHWAY ADMINISTRATION.

NOT TO SCALE

Concord NORTH CAROLINA High Performance Living

END OF STREET
FUTURE DEVELOPMENT SIGN

3-2022
MISC-205
SHEET 1 OF 1

WARRANTS

STANDARD SAFETY RAIL (STD. MISC–206 SHEET 2) SHALL BE INSTALLED UNDER ANY OF THE FOLLOWING CIRCUMSTANCES IN BOTH NEW CONSTRUCTION AND IN RETROFITTING OR RECONSTRUCTION OF EXISTING ROADWAYS OR SITES:

1. WHEN THE CULVERT CROSSING DETAIL (STD. STR–119) APPLIES.
2. IF THERE IS A TWO FOOT OR GREATER DROPOFF WITHIN 2 FEET OF THE EDGE OF THE SIDEWALK (SEE DIAGRAM A).
3. IF THERE IS A 1–FOOT OR LARGER DROPOFF DIRECTLY ADJACENT TO THE SIDEWALK EDGE (SEE DIAGRAM B).
4. AT THE TOP OF ANY DROPOFF WITHIN THE PEDESTRIAN CLEAR ZONE OR WHERE PEDESTRIANS CAN REASONABLY BE EXPECTED IN THE VICINITY.
5. AT THE DIRECTION OF CITY TRANSPORTATION OR ENGINEERING STAFF BASED ON FIELD CONDITIONS.

DEFINITIONS

- DROPOFF –– A SLOPE OF 2:1 OR STEEPER. EXAMPLES INCLUDE HEADWALLS, RETAINING WALLS, AND CULVERTS.
- PEDESTRIAN CLEAR ZONE –– 10 FEET OF ANY COMBINATION OF SIDEWALK, SLOPE, AND SHOULDER SLOPED AT 6:1 OR FLATTER. SIDEWALK DOES NOT NEED TO BE PRESENT.
- SIDEWALK –– FOR PURPOSES OF THIS STANDARD, THE TERM "SIDEWALK" IS USED GENERICALLY AND SHALL MEAN ANY PATH OR SURFACE TO BE USED FOR BICYCLE AND/OR PEDESTRIAN TRANSPORTATION. EXAMPLES INCLUDE, BUT ARE NOT LIMITED TO, SIDEWALKS, BIKE PATHS, SHARED–USE PATHS, PEDESTRIAN PATHS, AND GREENWAYS.

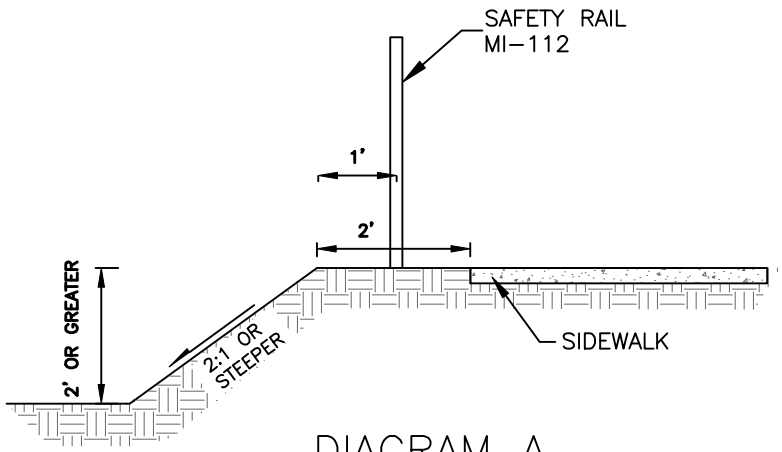

DIAGRAM A

SLOPED DROPOFF AT BACK OF SIDEWALK

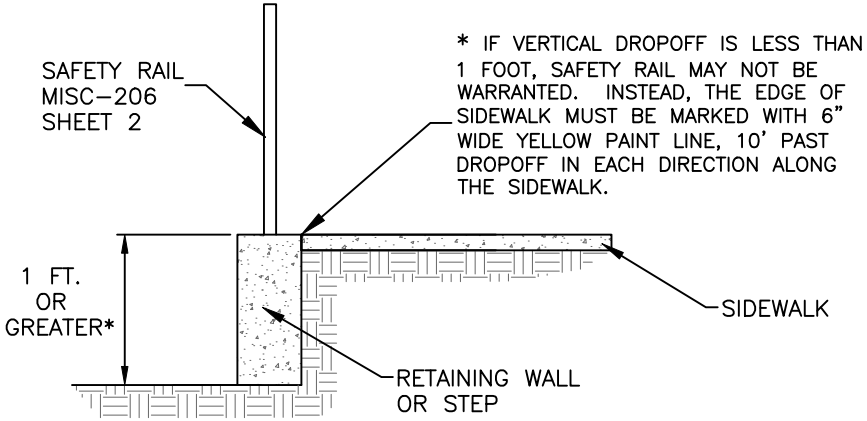

DIAGRAM B

VERTICAL DROPOFF AT BACK OF SIDEWALK

NOT TO SCALE

Concord NORTH CAROLINA High Performance Living

SAFETY RAIL & WARRANTS

3–2022

MISC–206

SHEET 1 OF 2

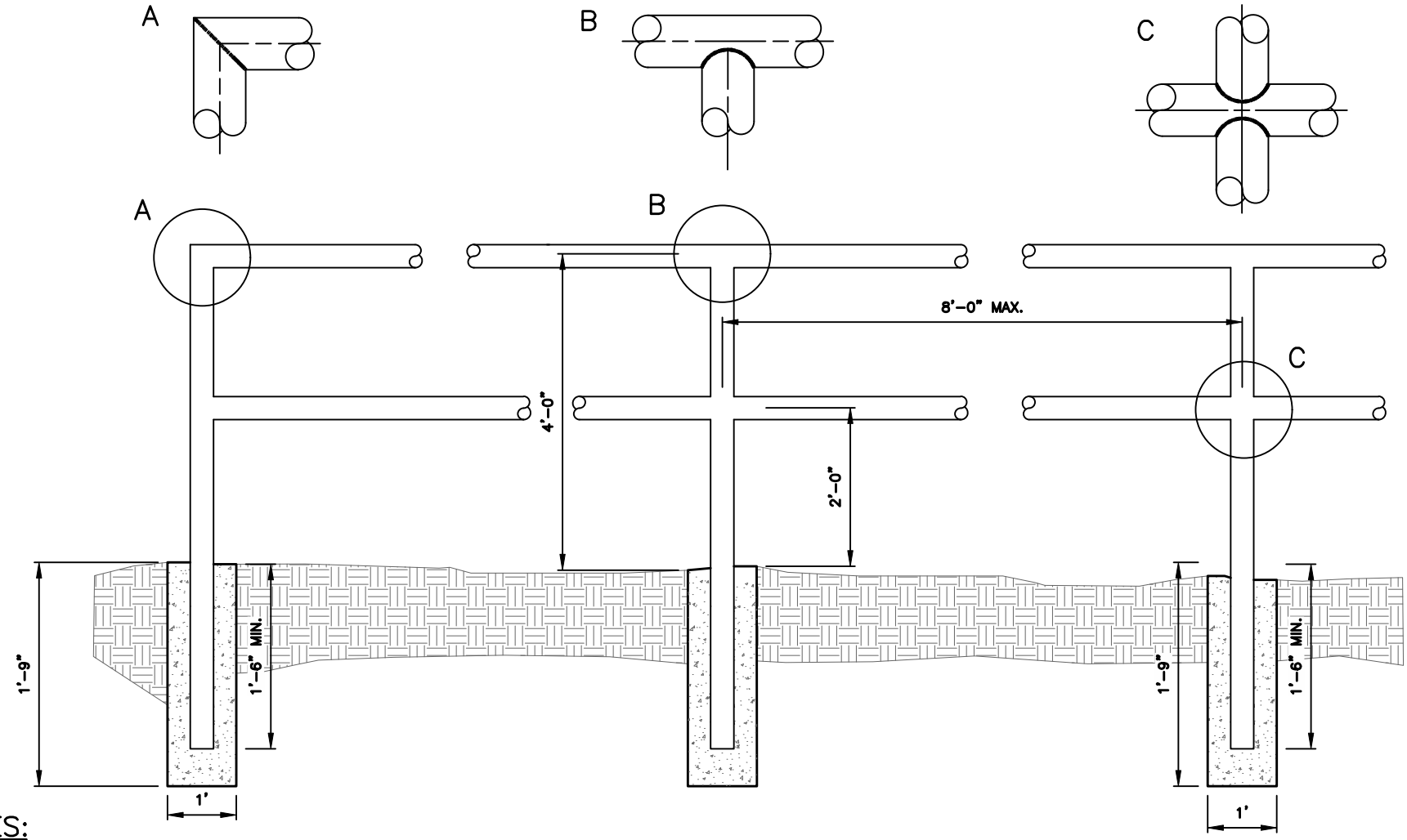

NOTES:

1. ALL CONCRETE TO BE 3600 P.S.I. COMPRESSIVE STRENGTH.
2. TYPE OF PIPE TO BE USED IS 1-5/8" MAX. O.D. BLACK IRON, LOW CARBON PIPE OR GALVANIZED.
3. ALL JOINTS TO HAVE A 1/2" FILLET WELD AT ALL JOINTS.
4. PAINT ASSEMBLY AFTER INSTALLATION WITH BLACK ALL WEATHER ENAMEL.
5. SEE STD. MISC-206 SHEET 1 FOR WARRANTS

NOT TO SCALE

Concord NORTH CAROLINA High Performance Living

SAFETY RAIL & WARRANTS

3-2022

MISC-206

SHEET 2 OF 2